ESA PYRONICS INTERNATIONAL
SIAD Group

Burners

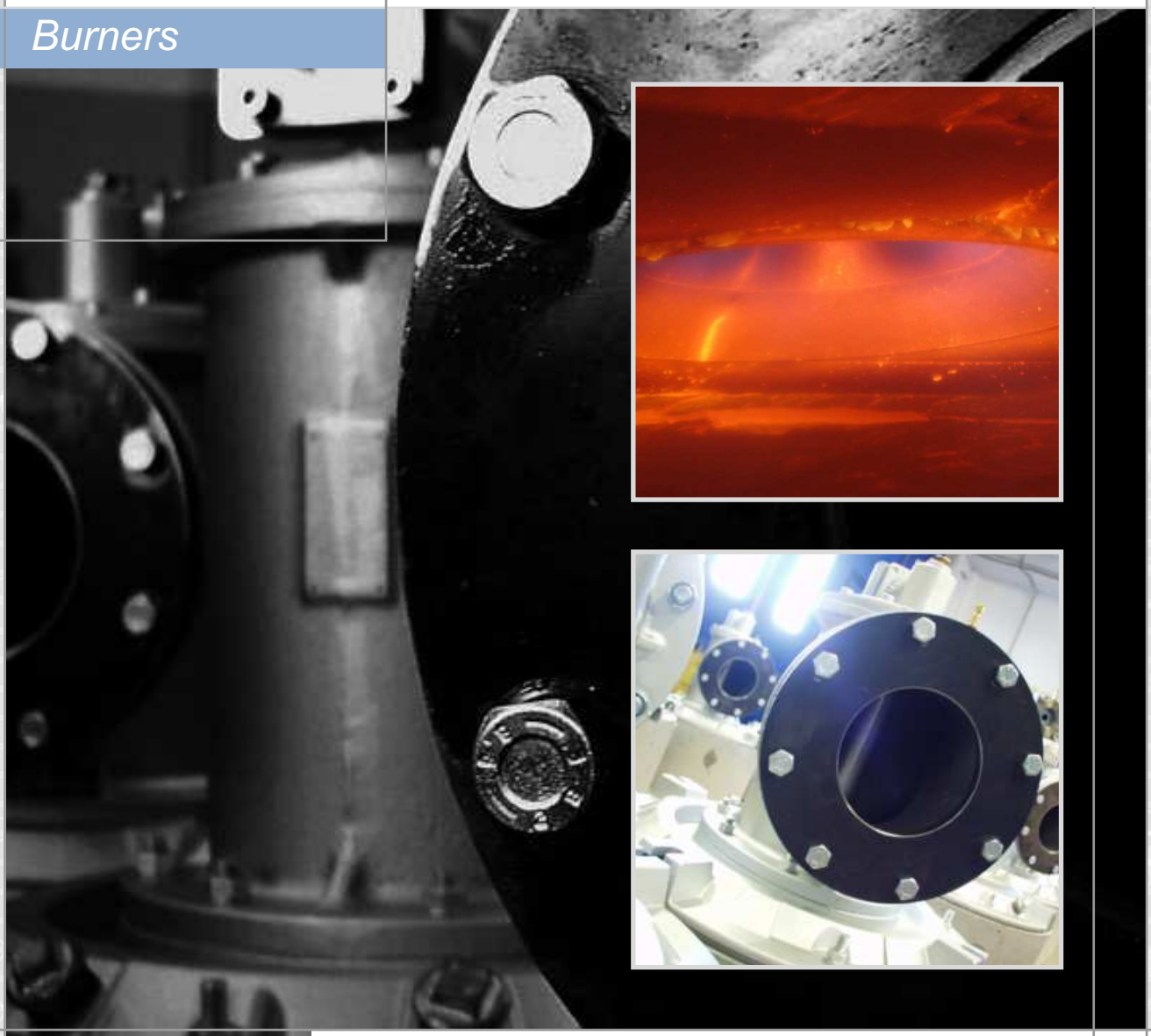

LOW NOx Radiant flame burners

RAD-NxT (E3319 rev. 01 - 17/02/2010)

GENERAL WARNINGS:

■ All installation, maintenance, ignition and setting must be performed by qualified staff, respecting the norms present at the time and place of the installation.

■ To avoid damage to people and things, it is essential to observe all the points indicated in this handbook. The reported indications do not exonerate the Client/User from observing general or specific laws concerning accidents and environmental safeguarding.

■ The operator must wear proper DPI clothing (shoes, helmets...) and respect the general safety, prevention and precaution norms.

■ To avoid the risks of burns or high voltage electrocution, the operator must avoid all contact with the burner and its control devices during the ignition phase and while it is running at high temperatures.

■ All ordinary and extraordinary maintenance must be performed when the system is stopped.

■ To assure correct and safe use of the combustion plant, it is of extreme importance that the contents of this document be brought to the attention of and be meticulously observed by all personnel in charge of controlling and working the devices.

■ The functioning of a combustion plant can be dangerous and cause injuries to persons or damage to equipment. Every burner must be provided with certified combustion safety and supervision devices.

■ The burner must be installed correctly to prevent any type of accidental/undesired heat transmission from the flame to the operator or the equipment.

■ The performances indicated in this technical document regarding the range of products are a result of experimental tests carried out at ESA-PYRONICS. The tests have been performed using ignition systems, flame detectors and supervisors developed by ESA-PYRONICS. The respect of the above mentioned functioning conditions cannot be guaranteed if equipment, which is not present in the ESA-PYRONICS catalogue, is used.

DISPOSAL:

To dispose of the product, abide by the local legislations regarding it.

GENERAL NOTES:

■ In accordance to the internal policy of constant quality improvement, ESA-PYRONICS reserves the right to modify the technical characteristics of the present document at any time and without warning.

■ It is possible to download technical sheets which have been updated to the latest revision from the **www.esapyronics.com** website.

■ For ESA-PYRONICS, the NxT symbol has the following two meanings which are connected to each other:
NEXT GENERATION, or new generation burners that maintain functionality, reliability and performance.
NOx TECHNOLOGY energy saving and low polluting emissions.

CERTIFICATIONS:

EN746-2

The products manufactured by ESA-PYRONICS have been created in conformity to the **UNI EN 746-2:2010** Norms: Equipment for industrial thermal process - Part 2: Safety requirements for combustion and the movement and treatment of combustible elements. This norm is in harmony with the Machine Directive **2006/42/CE**. It is certified that the products in question respect all the requirements prescribed by the above mentioned Norms and Directives. These have been designed, produced, controlled and tested in accordance to the company's internal procedures for quality control, certified in conformity with the **UNI EN ISO 9001:2008** Norm by DNV Italia s.r.l.

The products conform to the Russian market requirements according to the **GOST** and **GOSGORTEKHNADZOR** certification.

CONTACTS / SERVICE:

Headquarters:
Esa S.p.A.
Via Enrico Fermi 40
24035 Curno (BG) - Italy
Tel +39.035.6227411
Fax +39.035.6227499
esa@esacombustion.it

International Sales:
Pyronics International s.a.
Zoning Industriel, 4ème rue
B-6040 Jumet - Belgium
Tel +32.71.256970
Fax +32.71.256979
marketing@pyronics.be

www.esapyronics.com

The RAD-NxT are gas burners for direct heating.These burners allow for radiant heat transfer without any repercussions caused by the effect of the flame. According to the size and working conditions, this type of burner can be supplied for natural gas, LPG or other types of fuels having different heating capacities (on request). The RAD-NxT burners guarantee a substantial decrease in pollutant emissions (CO & NOx) as well as lower consumption compared with traditional burners, thanks to their design which has been optimized for the use of preheated air up to 500°C.

APPLICATIONS

- Reheat Furnaces.
- Batch Anneal Furnaces.
- Forging Furnaces.
- Continuous Strip Heating Furnaces.
- Drying Ovens.
- Aluminum Melting Furnaces.
- Galvanizing Furnaces.
- Tube Upsetters.
- Glass Bending and Melting.
- Sinter Hoods and Clay Calcining.

CARATTERISTICS

GENERAL:

- Capacity: from 250 to 750 kW
- Functioning with various types of fuel gases: CH4/LPG/Propane/etc.
- Functioning with preheated air: 500°C
- Limit temperature: 1.350°C
- Air and gas pressure to the burner: 50 mbar
- Flow ratio: 1:6
- Flame velocity: 50-60 m/s
- Low CO e NOx.

MATERIAL COMPOSITION:

- Mixer body: Cast iron G25
- Collector: Cast iron G25
- Fixing flange: Cast iron G25
- Refractory block: Refractory cement Tmax=1750°C
- Flame proof tube: AISI304
- Combustion head: AISI310

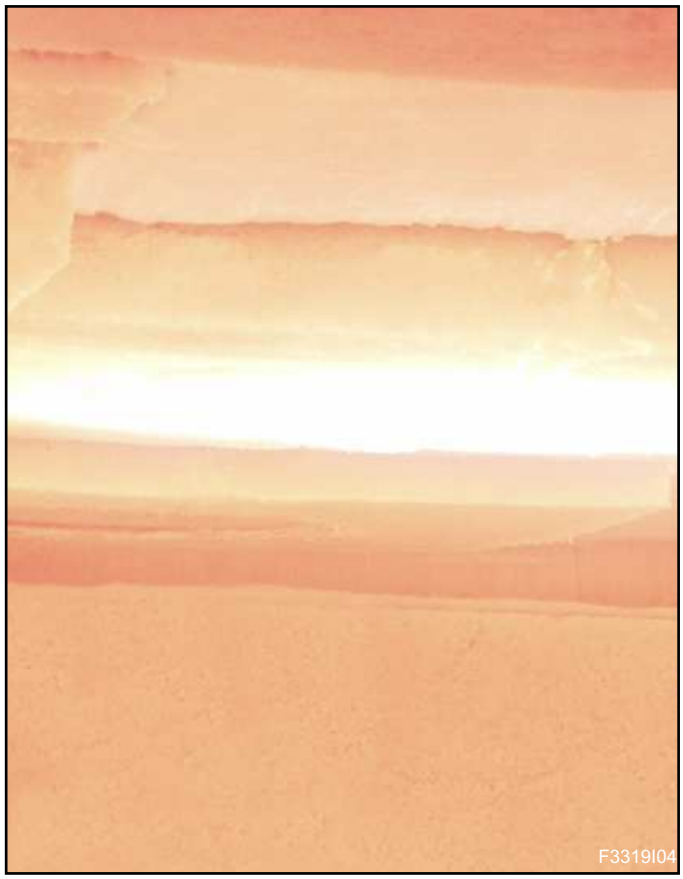

CAPACITY PARAMETERS

The RAD-NxT burner ignition takes place via a high tension discharge which is created by an electrode, or by a pilot flame; the detection takes place via UV rays. All the accessories related to igntion and detection are not included in the supply. The adoption of flame control systems is **strongly suggested** in all the plants operating at temperatures lower than 750°C (Regulation UNI EN746/2).

Model	Capacity kW (*)	Flame diameter mm	Flame projection mm	Ignition	Detection
RAD-25	250	400	100	PBC-FR/DSE	UV-HT
RAD-35	350	500	120	PBC-FR/DSE	UV-HT
RAD-45	450	650	150	PBC-FR/DSE	UV-HT
RAD-55	550	850	180	PBC-FR/DSE	UV-HT
RAD-65	650	1000	200	PBC-FR/DSE	UV-HT
RAD-75	750	1200	220	PBC-FR/DSE	UV-HT

The flame and diameter projections are approximate and refer to methane gas, placed in open air, functional in stoichiometric ratio and at nominal capacity.

(*) In the burner capacity, the preheated air enthalpic contribution is not included.

DESCRIPTION

The RAD-NxT burners are LOW NOx and apply the most updated technical improvements so as to guarantee low NOx and CO emissions, remaining however, functional even at low chamber temperatures, during ignition with plant still cold. They create a very high heat exchange between the furnace and the charge, due to the strong turbulence of the flame and its radiant component.

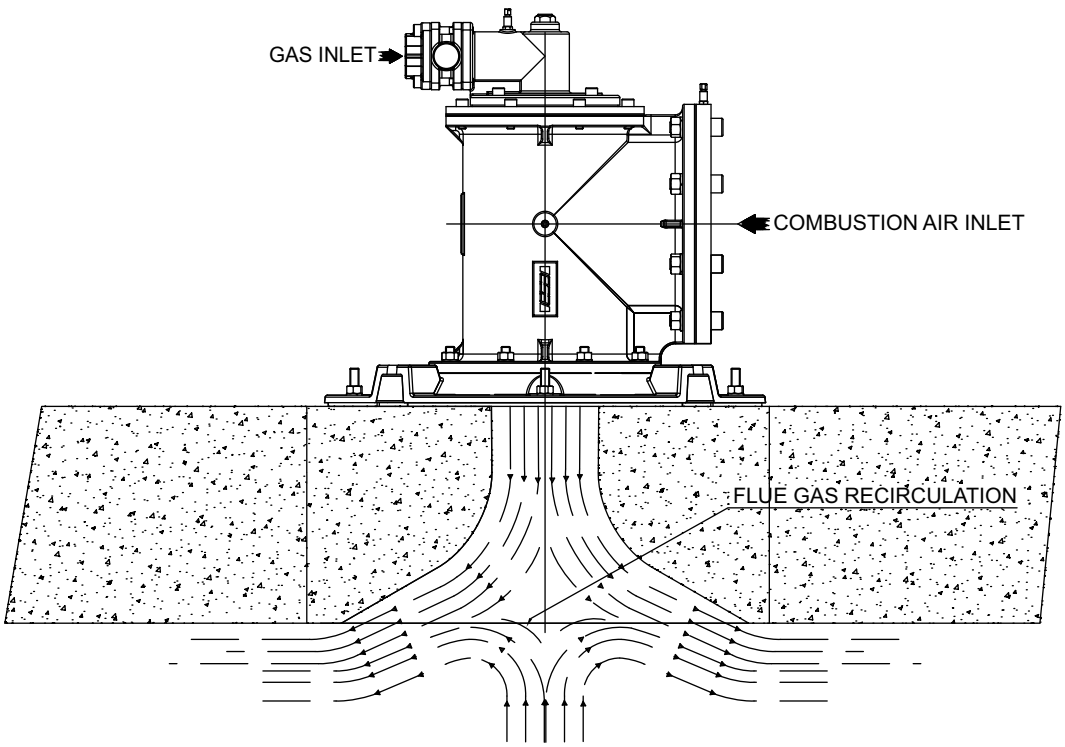

D3319I01

BURNER PERFOMANCES

The flame capacity and characteristics refer to a burner fed by natural gas (8600kcal/Nm3), placed in a combustion chamber at zero pressure at sea level and functional with 10% ecxess air.

- MIN/MAX functioning
- Chamber temperature 1200°C
- NOx < 250 mg/Nm^3 [O_2 = 2% ref.]
- air temperature: 500°C

MAXIMUM CAPACITY

Parameter			Burner model					
			RAD-25	RAD-35	RAD-45	RAD-55	RAD-65	RAD-75
Maximum power	**Burner capacity (2% O_2)**	**[kW]**	**250**	**350**	**450**	**550**	**650**	**750**
	Comburent air flow	[Nm^3/h]	275	385	495	605	715	825
	Comburent air temperature	[°C]	500					
	Gas flow	[Nm^3/h]	25	35	45	55	65	75
	Burner inlet air pressure	[mbar]	50					
	Burner inlet gas pressure	[mbar]	50					

MINIMUM CAPACITY

Parameter			Burner model					
			RAD-25	RAD-35	RAD-45	RAD-55	RAD-65	RAD-75
Min. power	**Burner capacity (2% O_2)**	**[kW]**	**50**	**70**	**90**	**110**	**130**	**150**
	Comburent air flow	[Nm^3/h]	55	77	99	121	143	165
	Comburent air temperature	[°C]	500					
	Gas flow	[Nm^3/h]	5	7	9	11	13	15
	Burner inlet air pressure	[mbar]	2					
	Burner inlet gas pressure	[mbar]	2					

BURNER CAPACITIES ACCORDING TO AIR TEMPERATURE

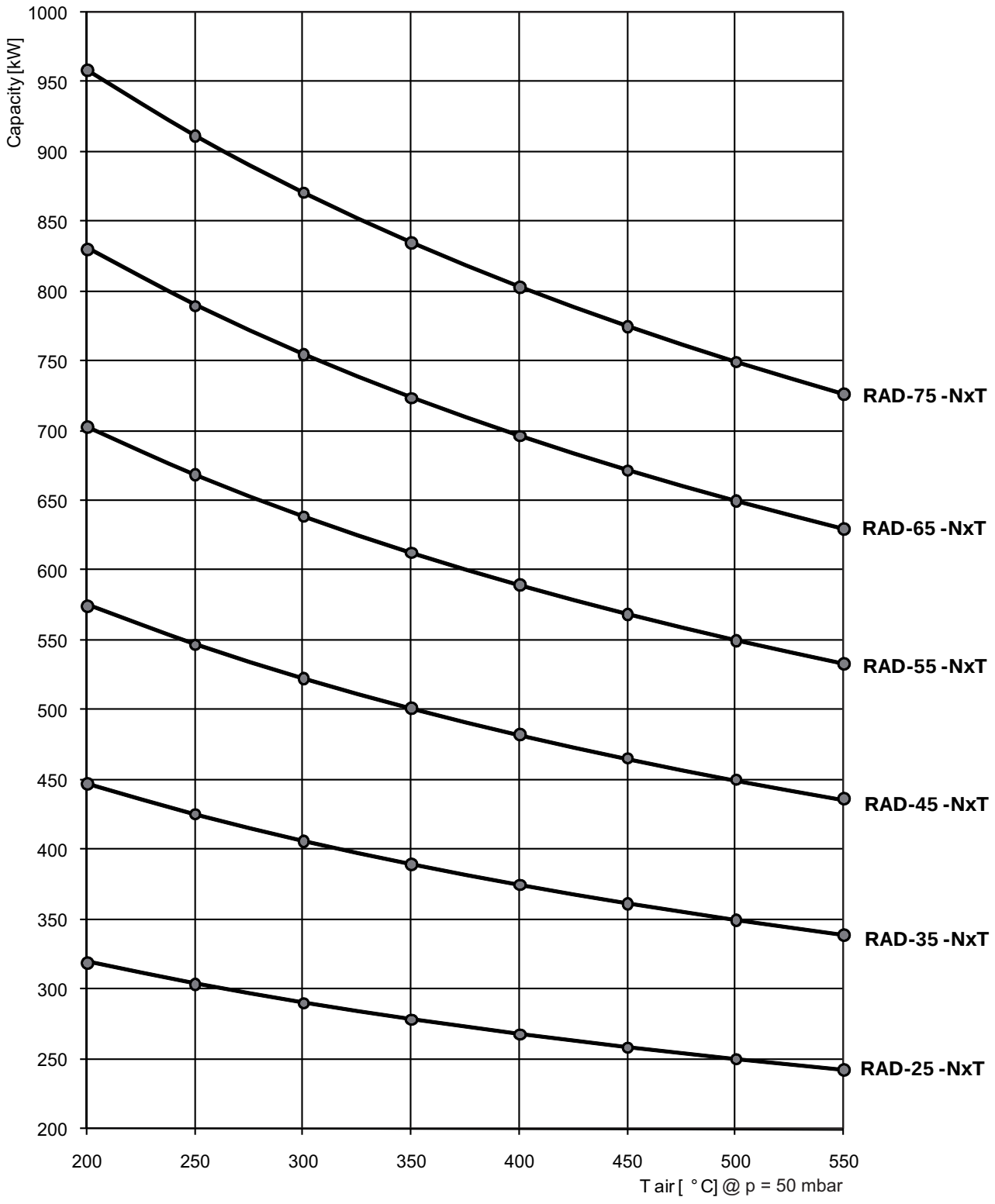

G3319I01

NOx EMMISSION TABLE

STANDARD FLAME COMBUSTION

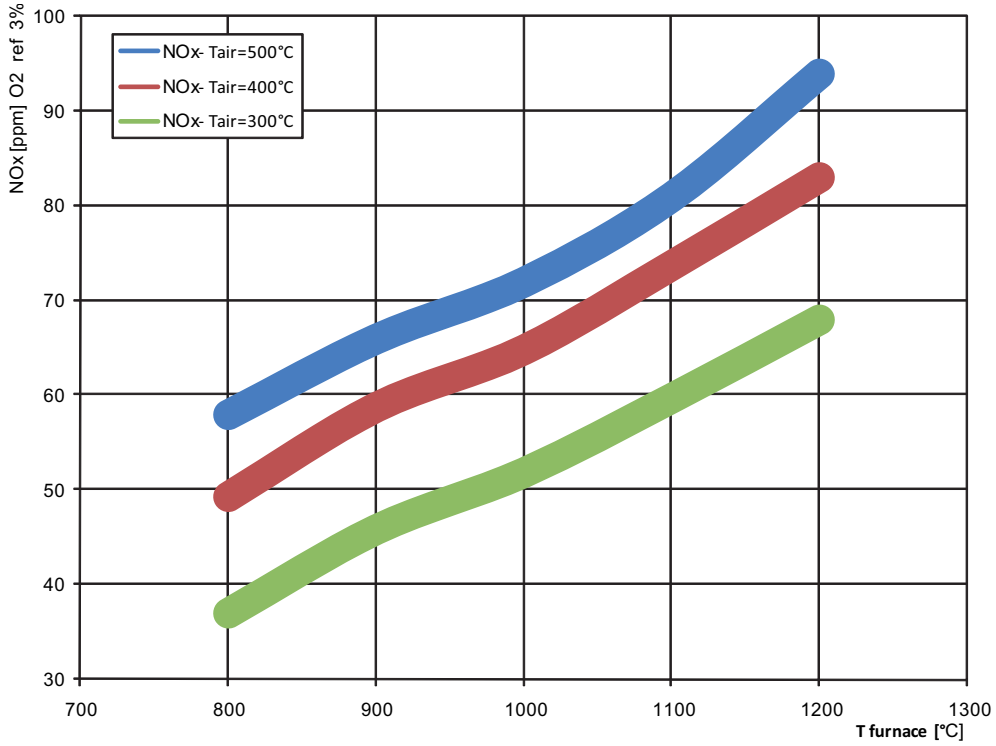

G3319I02

ULTRA LOW NOx FLAMELESS COMBUSTION

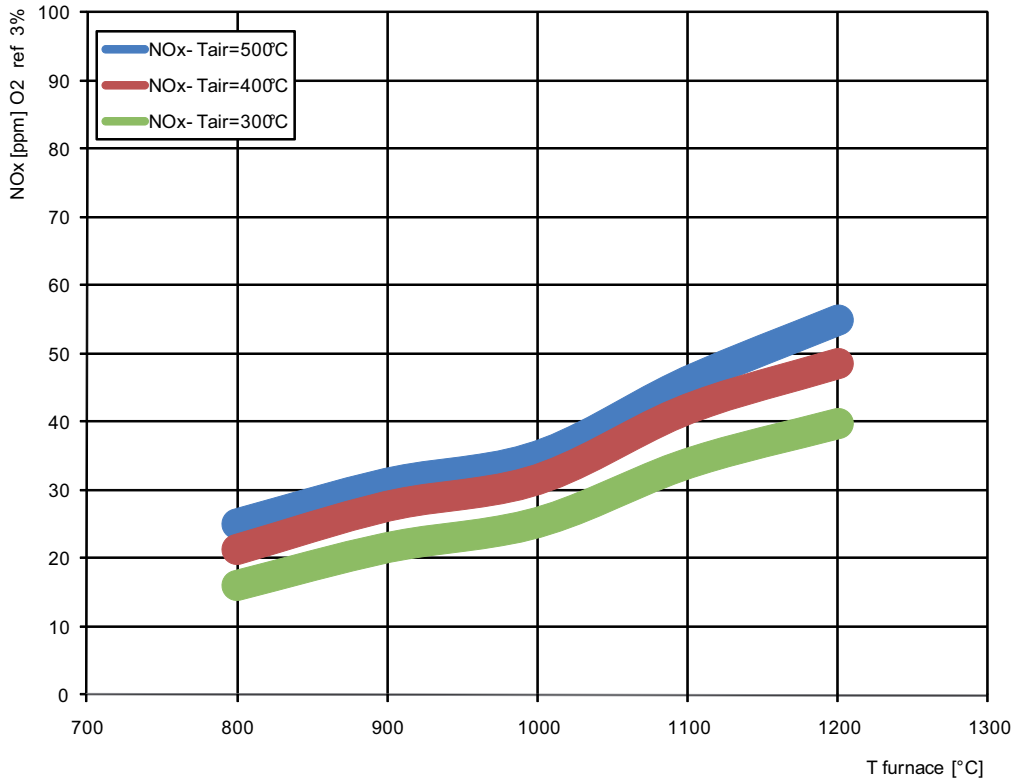

G3319I03

CAPACITY CHART

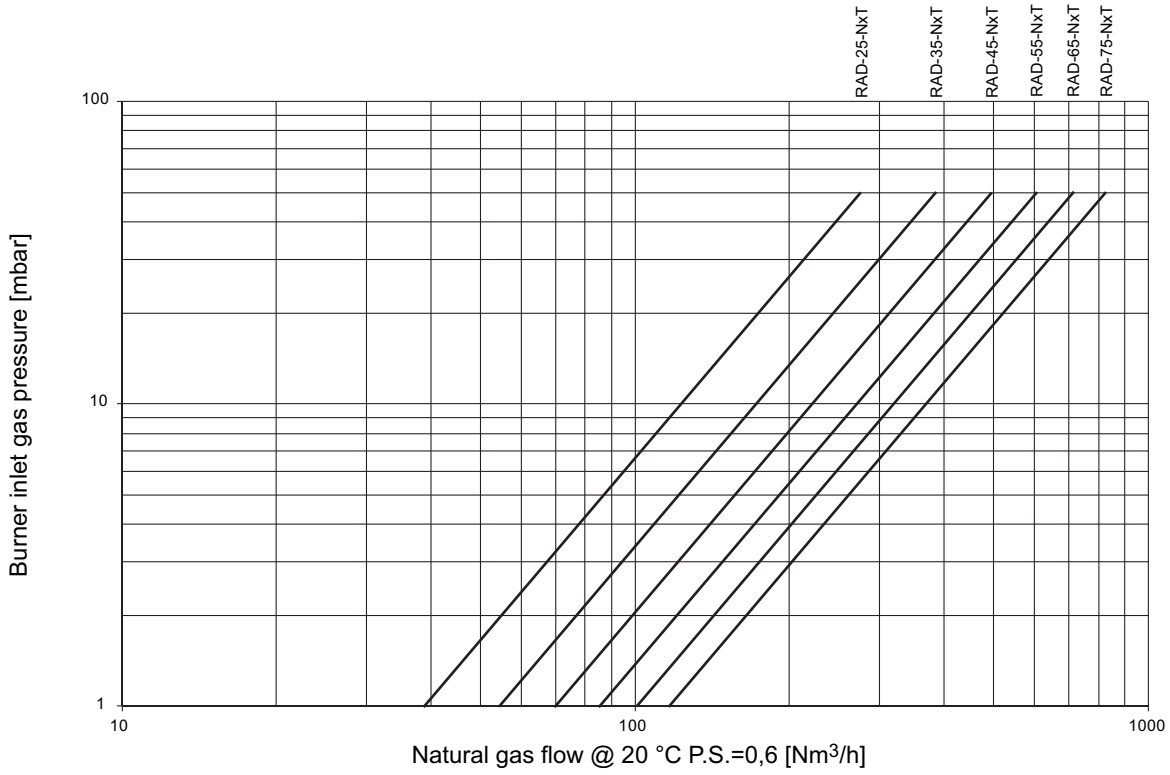

G3319I04

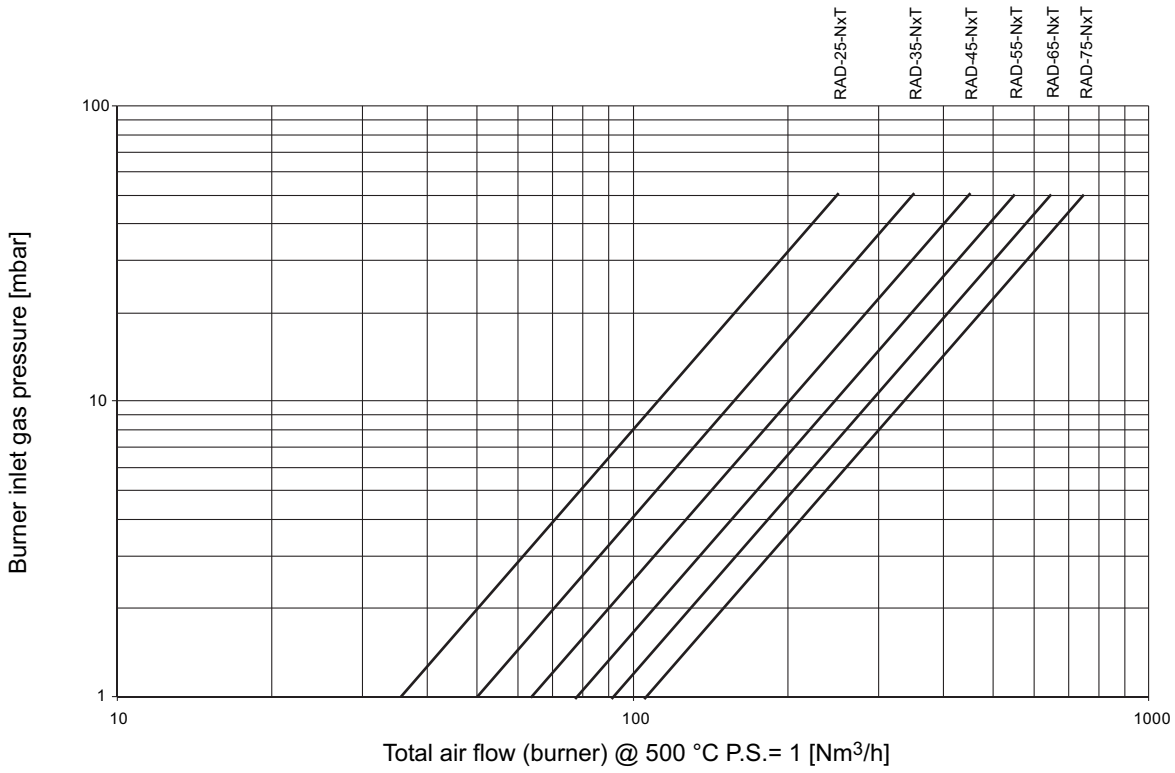

G3319I05

FLOW SCHEME

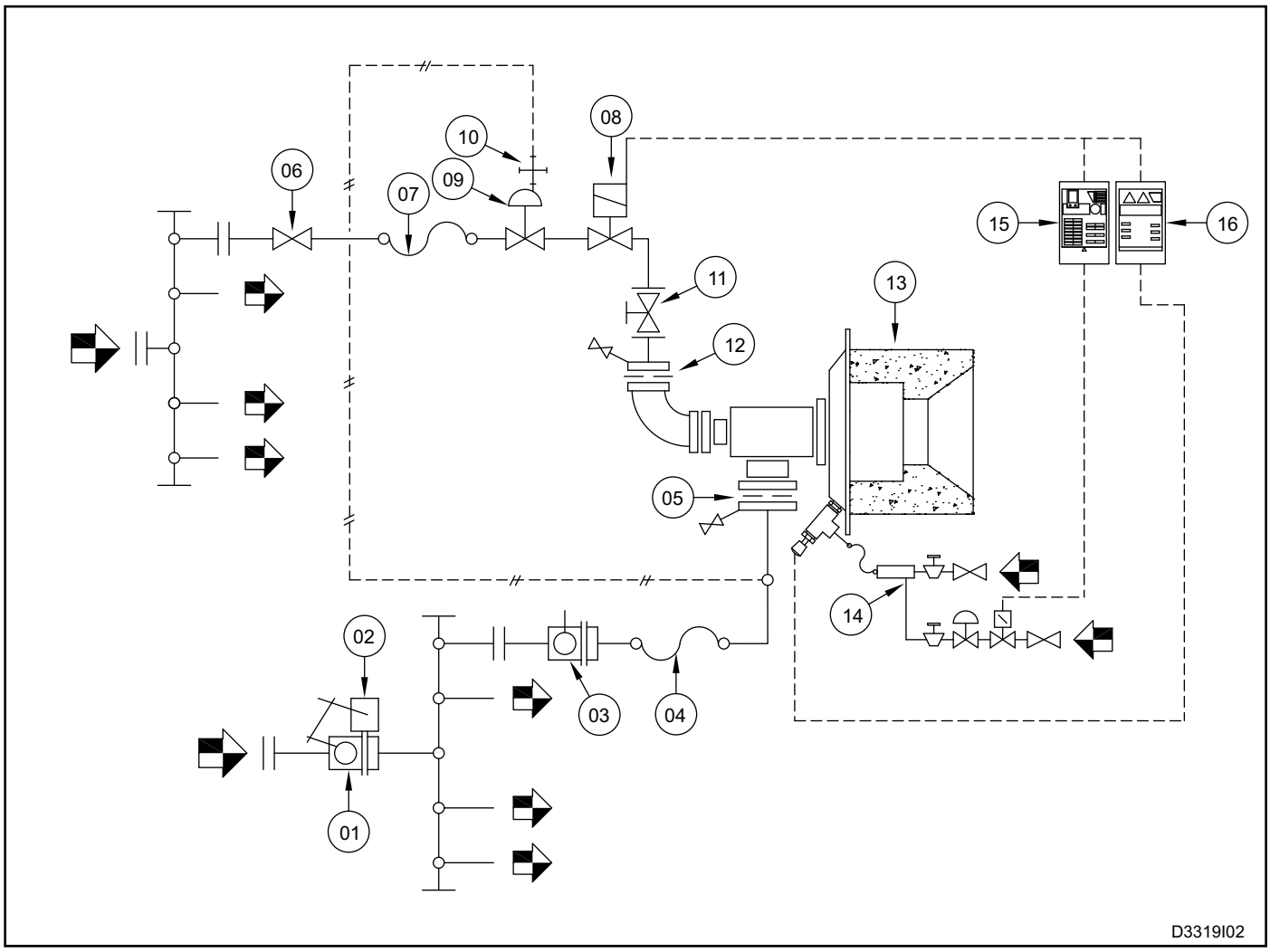

Pos.	Description	Included	Not Included
1	Servo controlled air regulation butterfly valve		X
2	Electric motor unit		X
3	Manual air regulation butterfly valve		X
4	Flexible hose		X
5	Calibrated orifice DP air measurement		X
6	Main gas interception ball valve		X
7	Flexible hose		X
8	Burner safety solenoid gas valve		X
9	Balanced modulator		X
10	Impulse line		X
11	Gas passage limiting device	X	
12	Calibrated orifice DP gas measurement		X
13	Main burner	X	
14	Pilot burner		X
15	Flame control device		X
16	Box with ignition transformer		X

WARNINGS

■ The RAD-NxT burner series are to be used in fixed installations. If mobile installations are necessary (bell furnaces etc...), take into consideration that possible damage to silicon carbide tubes could be caused due to the movement of the actual furnace.

■ Burner ignition must always be done at minimum power, and then modulating towards the maximum, thus facilitating the ignitions and reducing output overpressures.

■ The passing from minimum to maximum power, and vice versa, must be done gradually and not immediately.

■ For all applications at low temperatures (upto 750°C), the burner ignition and the fuel gas solenoid valve commands must be carried out using a certified burner control device.

■ To avoid possible damage to the burners, make sure that the blower does not blow air fouled by combustion products, oil, solvents or other. To prevent these phenomena from taking place, if possible, install the blower or suction duct outside of the establishment and far from the exhaust pipes.

■ Check that the feeding lines are correctly connected after installation. Before switching on the burner, check that the comburent air and fuel gas pressures are correct.

■ If there should be problems with other devices during the burner start-up phase, use a connector with anti disturbance filter to connect the high tension cable to the ignition electrode.

■ Avoid carrying out burner ignitions too close to each other, so as not to overheat the ignition system's command devices (solenoid valves and tarnsformers).

■ Prewash time lapse + first safety time lapse + min. of 5 sec. = time lapse between one ignition and another. (However, do not attempt more than 2 ignitions during a 30sec. time lapse

■ Make sure the power supply is TURNED OFF when intervening on the burner and its devices. In case of burner malfunctioning, follow the indications in the 'Maintenance' chapter of the present manual or contact ESA-PYRONICS assistance.

■ Any modification or repair done by third parties can compromise the application safety and automatically cause the general warranty conditions to expire. Contact ESA-PYRONICS assistance.

INSTALLATION

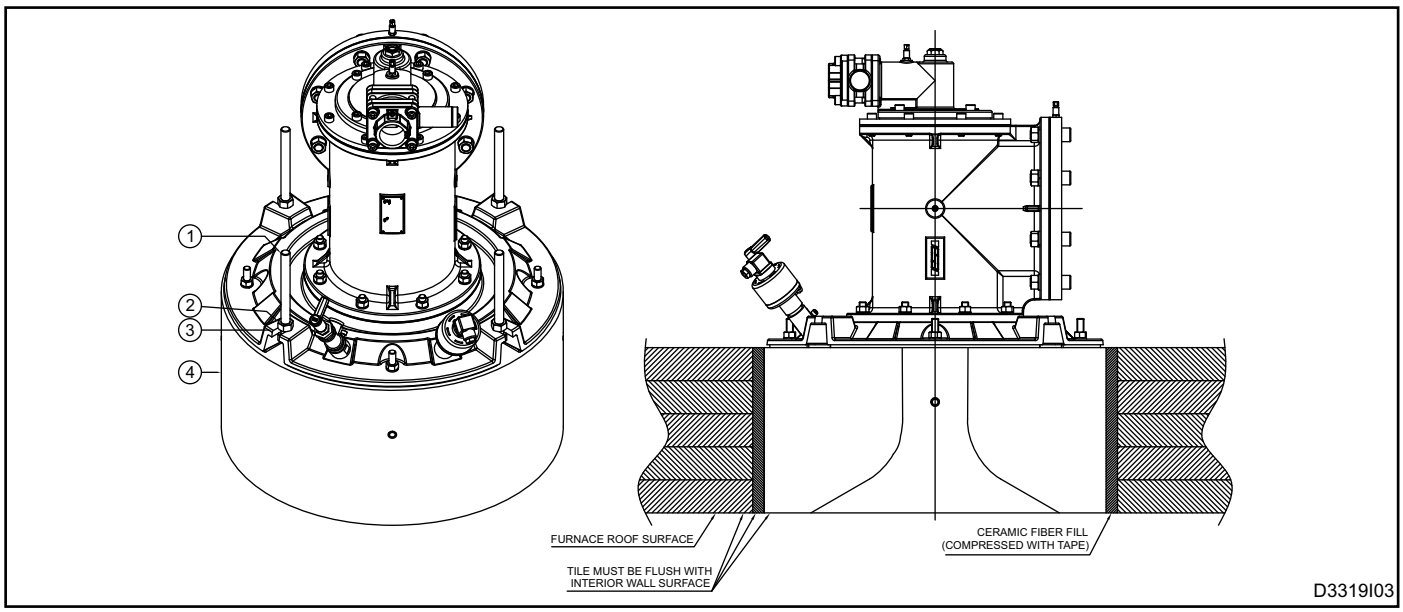

Place the burner in the appropriate housing on the furnace roof, fixing the braces **pos.01** and blocking nuts **pos.02** in the appropriate housings **pos.03** created from the burner plate.

Adjust the burner height acting on the braces until the bottom part of the refractory block **pos.04** is perfectly in line against the furnace wall. Make sure the burner position is perfectly flat.

Insert fibre compressed ceramic cuscion with adhesive tape between the block **pos.04** and the furnace wall, making sure that no empty spaces are created during burner installation.

IGNITION - SETTING

The procedures indicated in the following chapter must be carried out by expert technicians. The non-observance of the instructions given can provoke dangerous conditions.

1 - Check that the blower output combustion air and fuel gas pressures are within the allowed range.

2 - Regulate the working and intervention pressures of the combustion plant safety devices, whether there is one for each burner or just one general device for the whole combustion plant, such as: gas pressure reducers, block valve, relief valve, pressure switches, etc. Simulate the intervention of all the safety devices, including the intervention of the safety overtemperature, checking that all the fuel block devices react correctly.

3 - Place the motorized air regulation valve in the maximum opening position and regulate the burner inlet air pressures, referring to the values indicated in the “Burner Perfomance” chapter for the maximum potential on page 5.

4 - Place the motorized air regulation valve in the minimum opening position and regulate its opening to obtain (in burner inlet) the pressures concerning the minimum power.

5 - Activate the burner control device and attempt igniting the burner until it switches on. During the ignition attempts, act on the gas regulation valve and, starting from the totally closed position, open it gradually until obtaining burner ignition.

6 - Place the motorized air regulation valve at its maximum opening and regulate, via the gas regulation valve, the maximum fuel flow, and if necessary, checking the differential pressure created on the calibrated gas flange.

7 - Check again that, at minimum and maximum power, the burner inlet air pressures correspond to the data indicated in the “CAPACITY PARAMETERS” chapter. They may differ according to whether the burner is on or off.

8 - If necessary, with all the burners running at the same power, analyse combustion products in the chamber (where posssible).

9 - Repeatedly attempt ignition at minimum burner power, with maximum amplitude, to check the ignition reliability and the flame stability during regulation.

GENERAL MAINTENANCE PLAN

Operation	Type	Advised time	Note
Pilot burner high tension electrode connector	O	annual	Check integrity of outer plastic and oxidi zation of the internal electrode terminal
Ignition electrode	O	annual	Replace if the Kantal terminal is worn.
Pilot burner	O	annual	Check settings and ignition electrode and detection.
Integrirty of refractory block and internal burner parts	E	annual	From the inside check that there are no cracks in the refractory material each time the plant is switched off for maintenance.
UV scanner glass cleaning	O	every semester	Reduce to quarterly check in dusty environments
UV scanner replacement	O	10.000 h. of functioning	In any case, every two years.
Gasket replacement on gas side (**)	E	annual	See note.
Burner settings	O	annual	Repeat the steps in the 'IGNITION AND SETTING' chapter.

NOTE:
Key: O = ordinary / E = extraordinary
(*) it is suggested that the gaskets on the gas side are replaced after every disassembly of the gas feeding line.
(**) use high temperature gaskets

ORDINARY MAINTENANCE

For correct dismantling and better maintenance of the RAD-NxT burners, meticulously follow the instructions below with the plant turned off.

CLEANING OF UV-SCANNER WATCH GLASS

1 - Check that the burner control device is not connected.

2 - Disconnect power supply to the uv-scanner (**pos. 01**) and the cooling line (where present **pos. 07**).

3 - Unscrew the aluminium pipe fitting (**pos. 06**) at the base of the gas collector, removing the uv-scanner with its spacer.

4 - Unscrew the aluminium fitting from the insulation teflon connector (**pos. 03**) and remove the quartz watch glass (**pos. 05**).

5 - Clean the quartz watch glass with a damp cloth and proceed to reassemble everything making sure that both the glass as well as the gaskets are put back in the correct positions (**pos. 04**) between the aluminium teflon spacer, before tightening.

6 - Restore the cooling hoses and power connection.

7 - Check the correct flame detection of the uv-scanner.

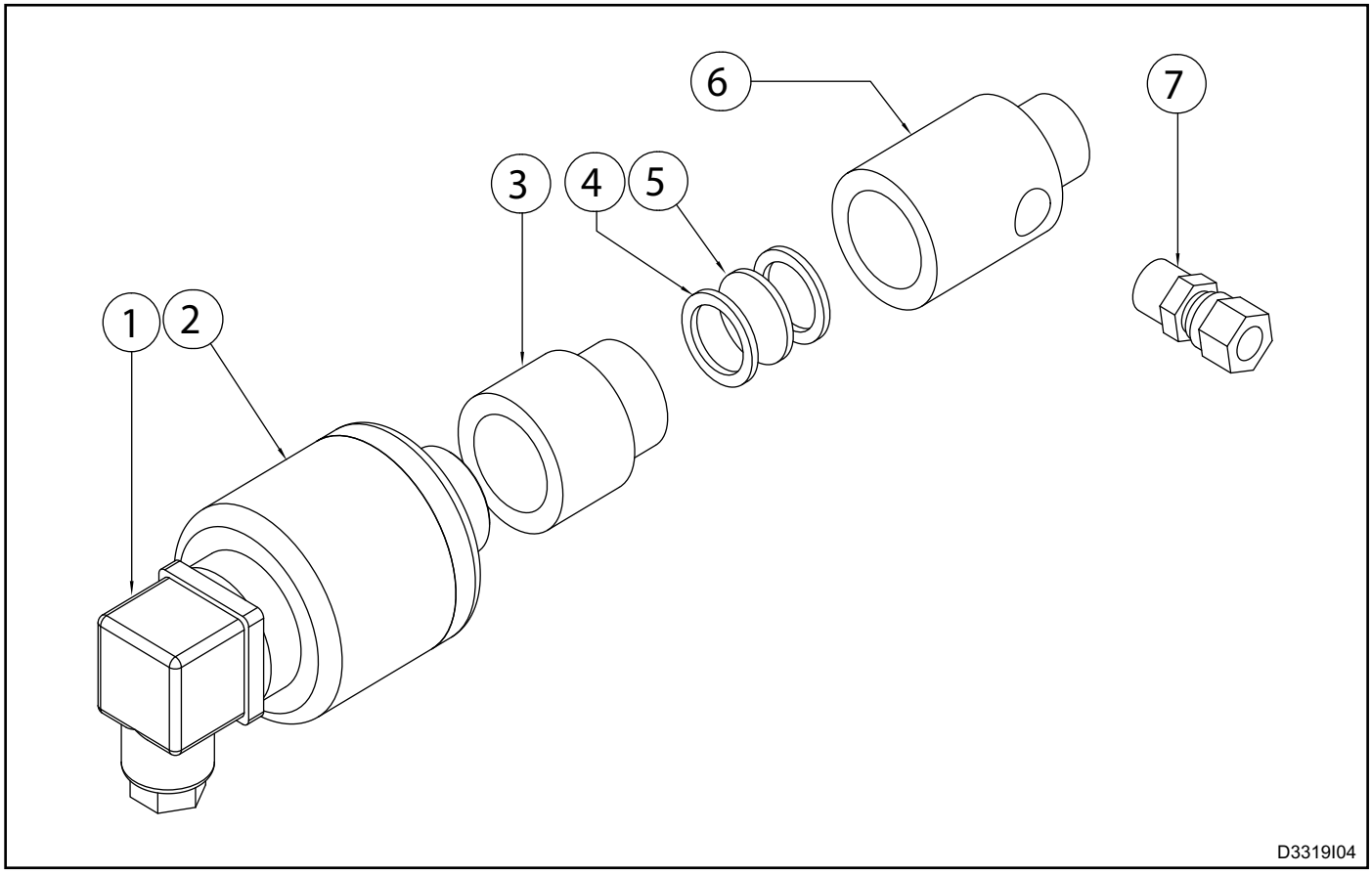

EXTRAORDINARY MAINTENANCE

For correct dismantling and better maintenance of the ENM-NxT burners, meticulously follow the instructions below with the plant turned off.

BURNER IN LOCKOUT

In burner lockout conditions, refer to the burner control device indications and to the relative manual so as to idenitfy the cause. Below the main cases are indicated:

- **Illegal flame detection**: lockout due to the detection of an illegal flame during the phases that precede the ignition or following shut off. The causes are to be found in the detection system (broken probe or presence of humidity), or else in the gas drawn by the safety solenoid valve which allows the burner to remain on.

- **Ignition failed**: lockout due to no flame formation during start-up. The causes are to be found in the ignition system (no spark, broken or badly positioned electrodes), in the bad regulation of fuel or comburent flow or in the detection system (broken probe or interrupted cables). Specifically, in the first two cases, the flame does not ignite, whilst in the last case, the flame forms but the burner control device is unable to detect it.

- **Flame signal loss**: lockout due to flame signal loss during the normal functioning of the burner. The causes are to be found in the bad regulation of fuel or comburent flow (rapid flow variations, regulation out of allowed range) or in the detection system (broken, dirty, or badly positioned probes).

OVERALL DIMENSIONS - RAD-NxT

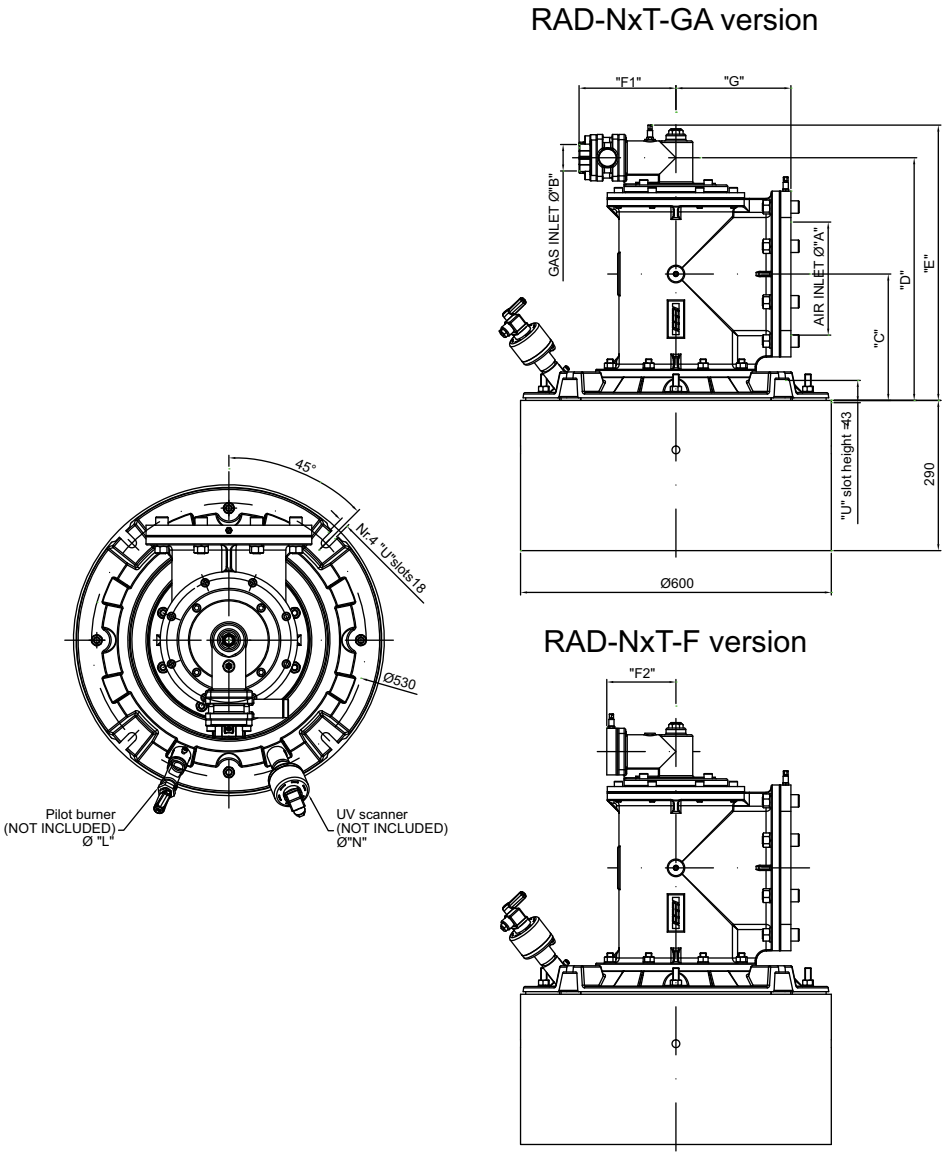

Burner Model	øA	øB (*)	C mm	D mm	E mm	F1 mm	F2 mm	H mm	Pilot Socket ø L	Pilot ø M	UV ø N	Mass Kg
RAD-25-NxT	DN100	Rp 1.1/4”	244	469	532	187	149	222	Rp 1”	Rp 3/4”	Rp 3/4”	299
RAD-35-NxT	DN100	Rp 1.1/4”	244	469	532	187	149	222	Rp 1”	Rp 3/4”	Rp 3/4”	299
RAD-45-NxT	DN150	Rp 1.1/2”	244	469	532	187	149	222	Rp 1”	Rp 3/4”	Rp 3/4”	249
RAD-55-NxT	DN150	Rp 1.1/2”	244	469	532	187	149	222	Rp 1”	Rp 3/4”	Rp 3/4”	249
RAD-65-NxT	DN150	Rp 2”	244	469	532	185	147	222	Rp 1”	Rp 3/4”	Rp 3/4”	249
RAD-75-NxT	DN200	Rp 2”	244	469	532	185	147	222	Rp 1”	Rp 3/4”	Rp 3/4”	249

(*) On request, burner with counter flange type to be welded.

ORDERING INITIALS - COMPLETE BURNER

RAD – [ ] – NxT [ ] – [ ] – [ ] – [ ] – [ ] – [ ] – [ ]
01 02 03 04 05 06 07

Model	01
RAD-35-NxT	**35**
RAD-45-NxT	**45**
RAD-55-NxT	**55**
...(see. capacity tab.)	**.....**

Gas adjuster	02
With gas adjuster	**GA**
Without gas adjuster	**F**

Fuel	03
Natural gas	**CH4**
LPG	**GPL**
Poor gas (1)	**GP**

04	Ignition
Pilot	**P**
Ignition electrode	**E**
Without ignition	**NI**

05	Flame detection
UV - scanner	**UV**
Without flame detection	**ND**

06	Combustion system
Standard combustion	**F**
Flameless combustion	**FL**(2)

07	Flanging type
ESA flange	**E**
According to client drawing	**C**

(1) Special applications done according to the gas characteristics.
(2) For ULTRA LOW NOx emissions.

ESA worldwide distribution

AUTHORIZED DISTRIBUTION STAMP

If you have any doubt about the qualification or identity of the distributor, please check that they appear on our website ***www.esapyronics.com*** *in the Sales Contacts section, or contact us directly at* ***esa@esacombustion.it***

ESA PYRONICS INTERNATIONAL
SIAD Group

© 2012 ESA S.p.A. Company under the management and coordination of SIAD S.p.A.
All rights reserved.

The information contained herein is offered for use by technically qualified personnel at their discretion and risk without warranty of any kind.

We regularly update our data, for updated data please visit our web site www.esapyronics.com

Printed in Italy
CATukR00/12

Head Office and Factory
ESA S.p.A. Company under the management and coordination of SIAD S.p.A.

Via E. Fermi, 40
I-24035 Curno (Bergamo)
ITALY

Tel.
+39 035 6227411

Fax
+39 035 6227499

esa@esacombustion.it
www.esapyronics.com

Share Capital euro 153.111,00 paid up - Fiscal Nr.: 03428410157 - V.A.T. Nr.: (IT) 00793030164
Reg. Impr. Bg Nr.: 03428410157 - R.E.A. BG-173124 - Export: BG0061150

Pyronics International s.a.
Zoning Industriel, 4ème rue
B-6040 Jumet
BELGIUM

Tel.
+32 71 256970

Fax
+32 71 256979

marketing@pyronics.be
www.esapyronics.com

www.esapyronics.com