ESA PYRONICS INTERNATIONAL
SIAD Group

Electronics

Permanent Operation Microprocessor Burner Control

ESA ESTRO-PO (E7014PO rev. 01 - 21/05/2013)

GENERAL WARNINGS:

■ All installation, maintenance, ignition and setting must be performed by qualified staff, respecting the norms present at the time and place of the installation.

■ To avoid damage to people and things, it is essential to observe all the points indicated in this handbook. The reported indications do not exonerate the Client/User from observing general or specific laws concerning accidents and environmental safeguarding.

■ The operator must wear proper DPI clothing (shoes, helmets...) and respect the general safety, prevention and precaution norms.

■ To avoid the risks of burns or high voltage electrocution, the operator must avoid all contact with the burner and its control devices during the ignition phase and while it is running at high temperatures.

■ All ordinary and extraordinary maintenance must be performed when the system is stopped.

■ To assure correct and safe use of the combustion plant, it is of extreme importance that the contents of this document be brought to the attention of and be meticulously observed by all personnel in charge of controlling and working the devices.

■ The functioning of a combustion plant can be dangerous and cause injuries to persons or damage to equipment. Every burner must be provided with certified combustion safety and supervision devices.

■ The burner must be installed correctly to prevent any type of accidental/undesired heat transmission from the flame to the operator or the equipment.

■ The performances indicated in this technical document regarding the range of products are a result of experimental tests carried out at ESA-PYRONICS. The tests have been performed using ignition systems, flame detectors and supervisors developed by ESA-PYRONICS. The respect of the above mentioned functioning conditions cannot be guaranteed if equipment, which is not present in the ESA-PYRONICS catalogue, is used.

DISPOSAL:

To dispose of the product, abide by the local legislations regarding it.

GENERAL NOTES:

■ In accordance to the internal policy of constant quality improvement, ESA-PYRONICS reserves the right to modify the technical characteristics of the present document at any time and without warning.

■ It is possible to download technical sheets which have been updated to the latest revision from the **www.esapyronics.com** website.

CERTIFICATIONS:

ESA ESTRO conforms to the **EN298** regulation according to the **KIP-077461/01** certificate issued by notified body **0694**. **ESA ESTRO** conforms to the European Directives: Gas Directive **2009/142/CE**, Low voltage directive **2006/95/CE**, Electromagnetic immunity **2004/108/CE**, in conjunction with the **EN298**, **EN230** and **EN746-2**.

The products conform to the Russian market requirements according to the **GOST** and **GOSGORTEKHNADZOR**.

ASSISTANCE/CONTACTS:

Headquarters:
Esa S.p.A.
Via Enrico Fermi 40
24035 Curno (BG) - Italy
Tel +39.035.6227411
Fax +39.035.6227499
esa@esacombustion.it

International Sales:
Pyronics International s.a.
Zoning Industriel, 4ème rue
B-6040 Jumet - Belgium
Tel +32.71.256970
Fax +32.71.256979
marketing@pyronics.be

www.esapyronics.com

ESA ESTRO is a microprocessor operated flame control device that controls gas and oil fired burners for continuous operation. This device safely controls one or two stage burners (pilot and main), combustion air, and is able to detect the flame signal via ionization sensors (electrodes) or UV radiation (UV-scan), continuously performing a periodic check of the flame sensor. The flame control device is equipped with a serial communication which allows remote burner control. The case is robust allowing the application of the control device near the burner.

F7014POI03

APPLICATIONS

- One or two stage burners (pilot or main), with any type of capacity, with permanent or non-permanent operation.
- Burners with electrode, unirod and UV detection (also combined).
- Package burners with complete ignition cycle control (blower, air regulation valve, pressure switch and air flow switch).
- Burners with air valve control for chamber purge, burner ignition and temperature regulation (heating/cooling) via external regulator command.
- Plants with burner control via digital signals or ECS serial communication.
- Personalized burner control via optional configuration cards.

F7014POI04

CHARACTERISTICS

GENERAL:

- Voltage supply: 115 Vac or 230 Vac +10 ÷ -15%
- Frequency supply: 45÷65 Hz
- Type of supply: phase-neutral, not appropriate for phase-phase systems
- Neutral: suitable for ground and non ground neutral systems
- No-load absorption: 5 VA max
- Working temperature: 0÷60 °C
- Storage temperature: -20÷80 °C
- Protection degree:IP54 (for wiring use specific glands)
- Mounting position: any
- Working environment: not suitable for explosive or corrosive environments
- Container: Thermosetting glass fiber
- Size: 200×120×93 mm
- Mass: 1.300 g
- Classified according to EN298 e EN230:configurable BOOLXK

CHARACTERISTICS

INPUTS AND OUTPUTS:

■ Voltage to the flame detection probe:	max 300 Vac
■ Minimum ionization current:	2,4 µA ± 0,3 µA
■ Current limits to the probe:	1 mA
■ Flame signal display:	0 ÷ 90 µA
■ Detection probe type:	electrode or scanner ESA UV-2
■ Probe line length to electrode or UV-2 detection:	< 30 m
■ Insulation between the probe conductors:	> 50 MΩ (cables with double insulation or double protection)
■ HV cable length from ignition transformer:	maximum 2 m
■ Distance between ignition electrode and burner mass:	3 mm ± 0,5
■ Digital input voltage:	the same as the supply voltage
■ Digital input absorption:	max 5mA
■ Filter for digital input:	RC 100 Ω - 0,47 µF - 250 Vac
■ Output voltage:	the same as the supply voltage
■ Maximum current per single output:	1,5 A (2 A for ignition transformer)
■ Total maximum current for all outputs:	3.15A per 10 second / minute
■ Output protection fuse:	3.15A rapid (*) replaceable
■ Internal relay protection fuse:	4 A not replaceable
■ Instrument protection fuse:	1 A not replaceable
■ Minimum voltage supply to maintain output (EN230):	70Vac (version 115Vac) and 140Vac (version 230Vac)
■ EXP-2, EXP-4 and EXP5 expansion card input voltage:	24 Vac/Vdc, 115 Vac, 230 Vac
■ EXP-2, EXP-4 e EXP5 expansion card input absorption:	max 5mA
■ EXP-2, EXP-4 e EXP5 expansion card output voltage:	the same as the supply voltage
■ EXP-2, EXP-4 e EXP5 expansion card output maximum current:	2A (not protected by internal fuse)

(*) On request it is possible to implement a fast fuse 4A.

PARAMETERS:

■ Purging or waiting time before ignition:	0 ÷ 99 sec or 2 ÷ 20 min
■ 1st gas stage safety time*:	1 ÷ 25 sec
■ Regulation delay time or 2nd gas stage safety time*:	0 ÷ 25 sec
■ Reaction time*:	1 ÷ 20 sec
■ Shut off purging or waiting time:	0 ÷ 99 sec or 2 ÷ 4 min
■ Accepted remote unlocks:	max 5 in 15 minutes
■ Flame sensor check on permanent operation:	in 1 hour
■ Auto shut down for test with non permanent operation:	in 24 hours
■ Behaviour at flame loss:	configurable
■ 1st gas stage burner functioning:	configurable
■ Air valve functioning:	configurable

* These parameters must be set according to the norm that is applicable at the time of installation.

DESCRIPTION

ESA ESTRO is a microprocessor flame control device equipped with inputs and outputs for controlling and supervising burners with permanent functioning, fit for applications in which the burners remain running for more than 24 hours. The instrument has four different versions:

■ **ESA ESTRO-A**: to be used for single stage burners with air valve control. Via the configuration software it is possible to chose the air valve behaviour.

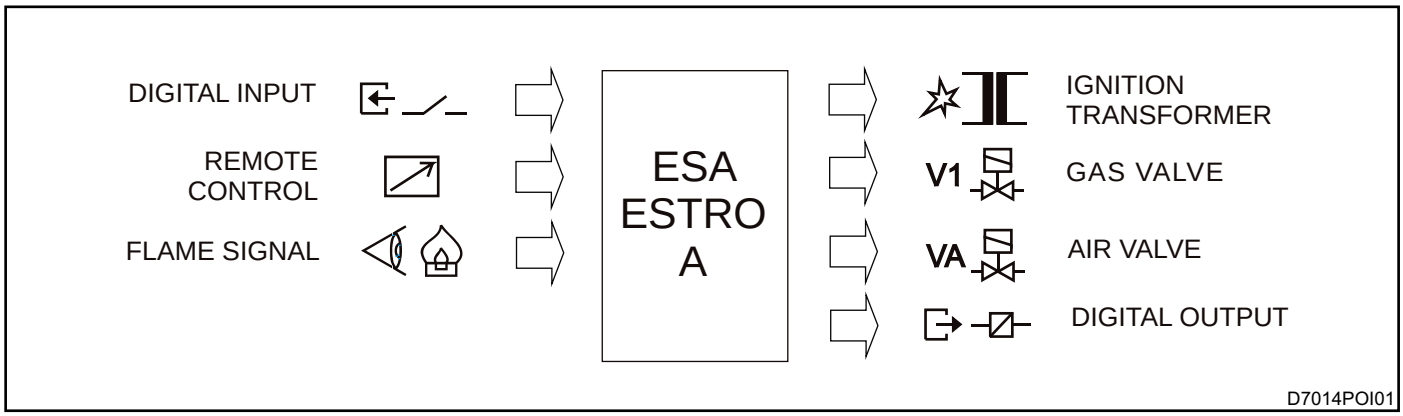

■ **ESA ESTRO-B**: to be used for double stage burners: 1st stage (pilot), 2nd stage (main). Via the configuration software it is possible to choose between the interrupted or continuous 1st stage burner functioning.

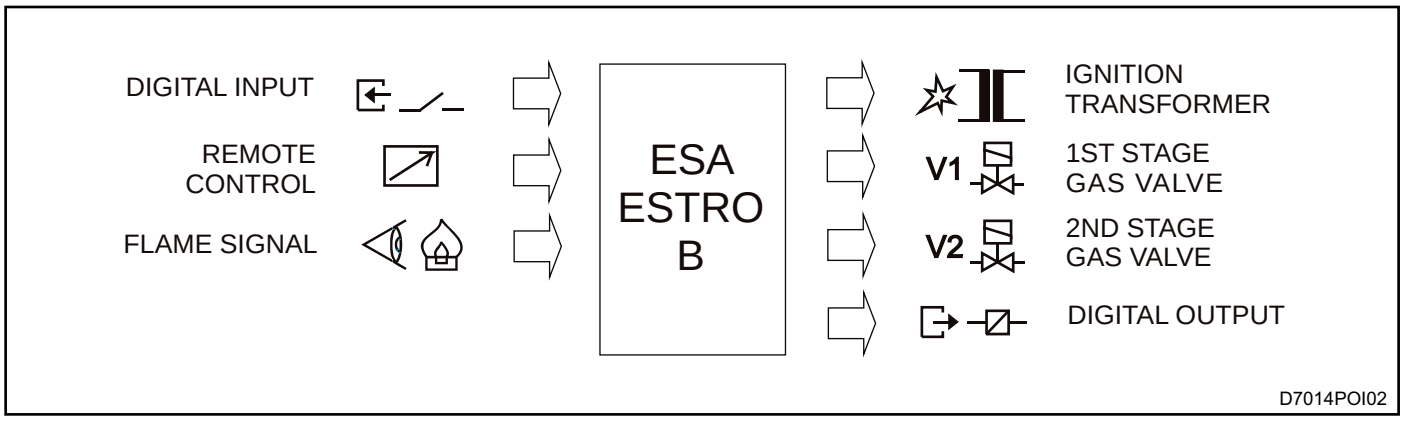

■ **ESA ESTRO-C**: to be used for single gas stage burners with burner running output available (volt free contact SPST)

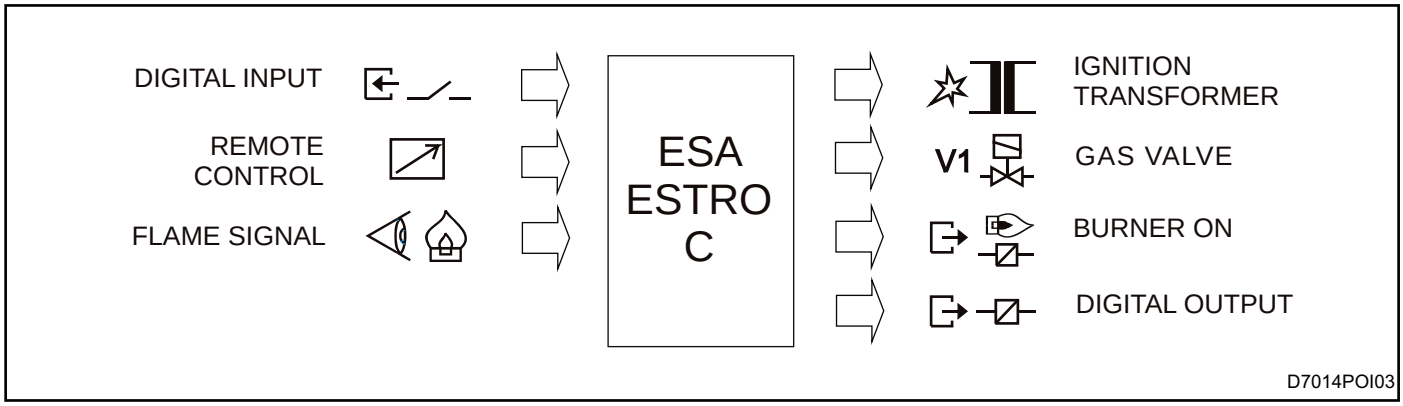

■ **ESA ESTRO-Q**: to be used for single stage burners in which control is done via serial line.

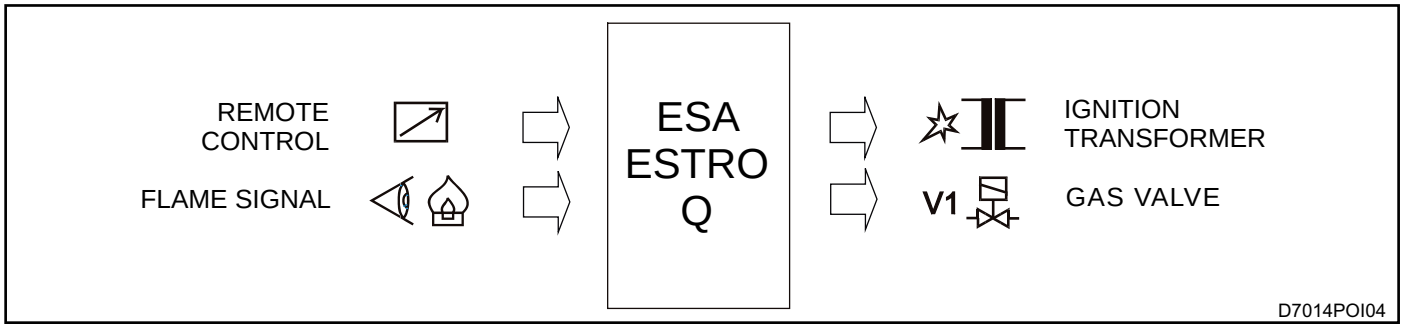

The ESA ESTRO-A, B and C versions also have a digital configurable input and output, in particular the digital input is necessary in high temperature applications to activate specific functioning (see Norm EN746-2), whilst the digital output is used to check the UV-2 sensor during permanent operation. Depending on the working time and on the type of burner flame detection, it is possible to define the sensor's check method by selecting from the internal check of the ionization probe every hour, external check of the UV-2 sensor via the dimming shutter every hour or shut down every 24 hours for non permanent operation with UV-2. All the ESA ESTRO versions are equipped with the ESA ECS serial interface that allows to completely control the burner from remote, communicating via the ECS or Modbus-RTU protocols, both implemented as standard in the instrument. Via serial communication a complete check of the burner is possible: ignition and shut down, pilot and main burner control, air valve control, information on the status and value of the flame signal.

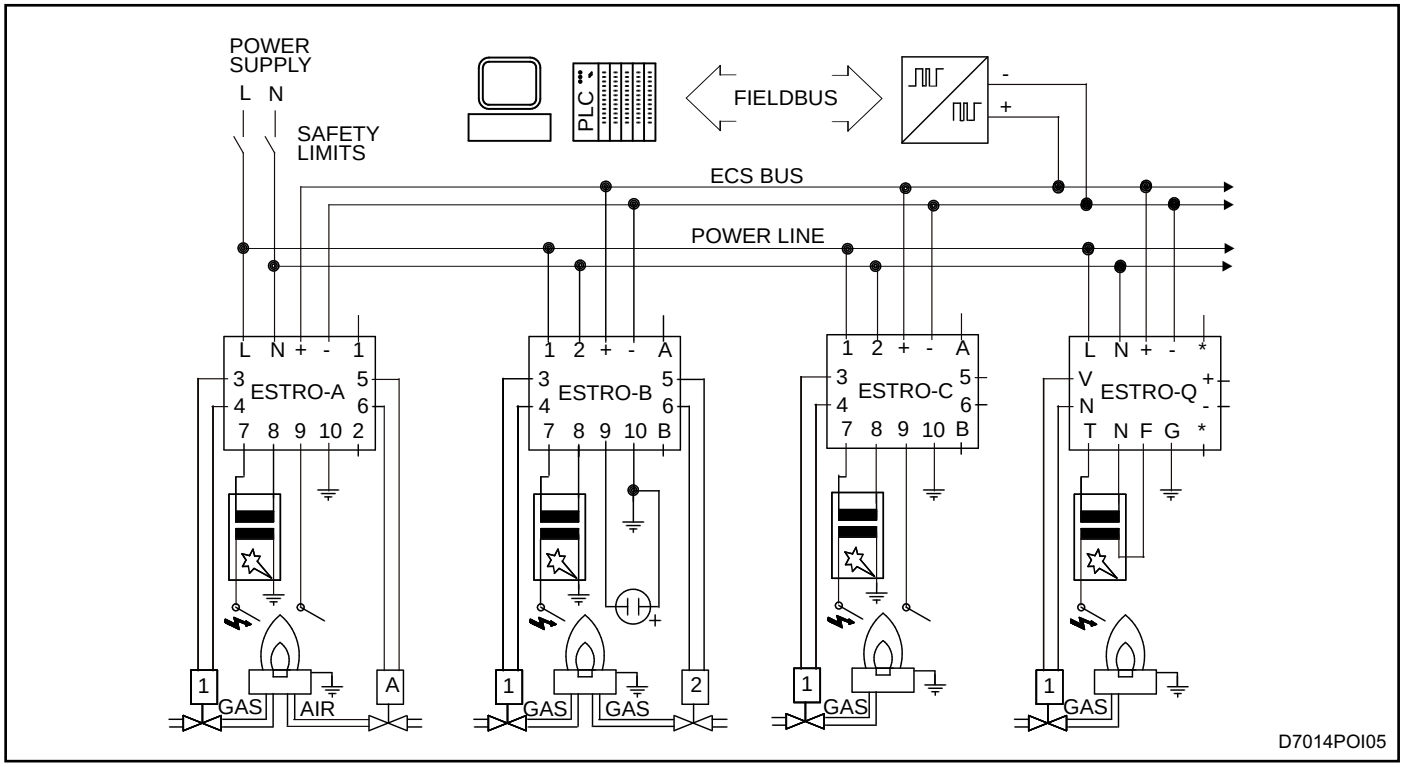

On the front panel, ESA ESTRO has a configurable local button, a phase indication display, a bargraph flame signal indicator as well as the infrared port for the configuration of certain parameters via a hand held programmer. Via the special programming software, the instrument allows the configuration of parameters and functioning modes according to the application needs. It is possible to personalize the air valve command or the digital output, select the digital input or front button behavior or change timers of certain phases, provided that the applicable norm at the time of installation is respected. ESA ESTRO runs the burner ignition cycle count, storing the number of activations of the first stage gas valve and then the second stage gas valve or air valve. Via the programming software or hand held (portable) programmer you can read the numbers of the cycles performed following maintenance of the valves and reset the meters. All the ESA ESTRO versions are equipped with a replaceable protection fuse that blows in case of failures in the connected devices. Furthermore there is a non replaceable

internal relay protection fuse that blows only in case of malfunctioning of the first. ESA ESTRO is supplied in a robust case in thermoset material, predisposed for the housing of the ignition transformer and for the outputs of the various connecting cables with external users. Expansion cards that allow further control of the burner devices or specific serial communication can be applied to all the versions. The installation of the expansion cards precludes the possibility of mounting the ignition transformer inside the instrument.The available expansions are indicated below:

■ **ESA EXP-2**: expansion that allows to control a package type burner, able to activate the air valve or blower, check the air pressure switch status and control the air damper during the prepurge and burner ignition phases. The EXP-2 expansion card can also be used only to control the air valve (for versions that are different from ESTRO-A).

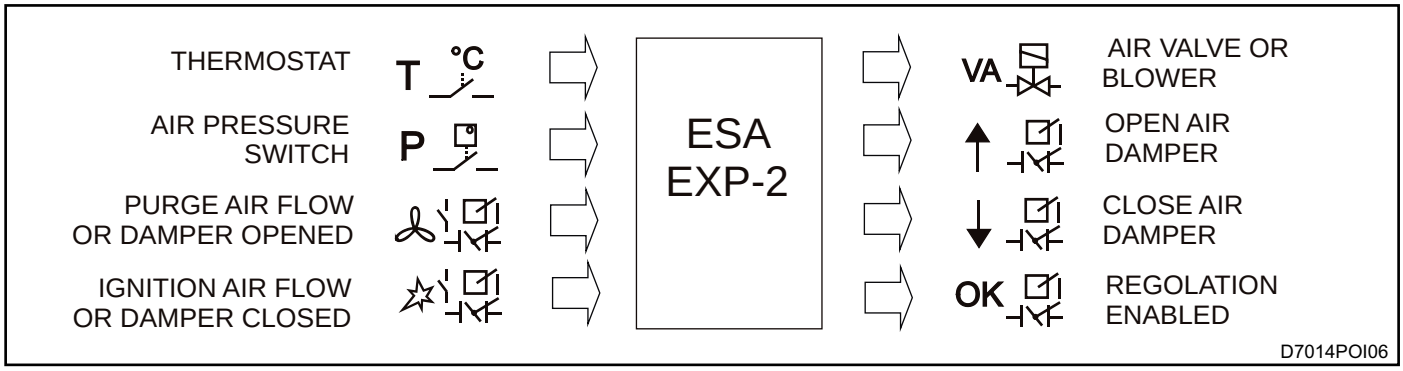

■ **ESA EXP-3**: expansion allowing to interface the flame control with the most common field bus. For detailed information refer to specific data sheet E7015.

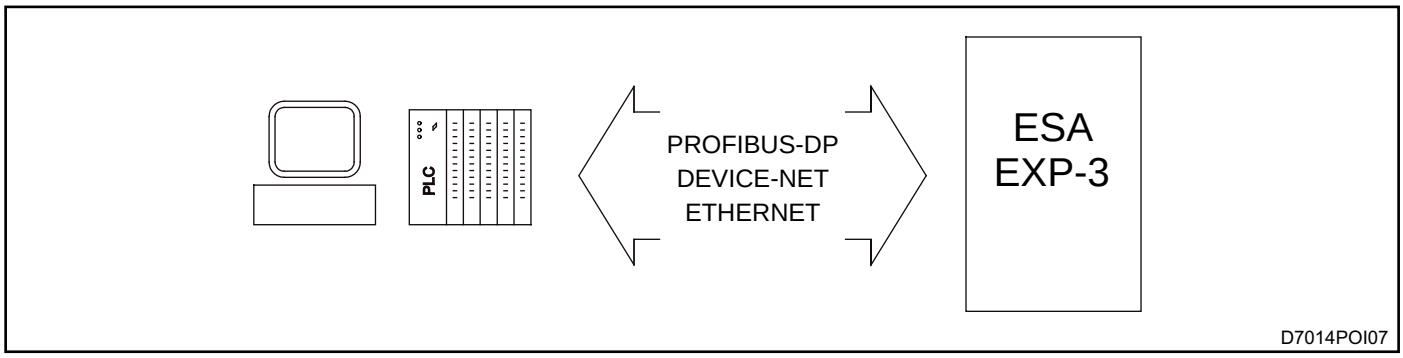

■ **ESA EXP-4**: expansion having four digital inputs and four digital outputs as well as an analogical input and output, and a serial interface that allows to control the card from remote. For detailed information refer to specific data sheet E7016.

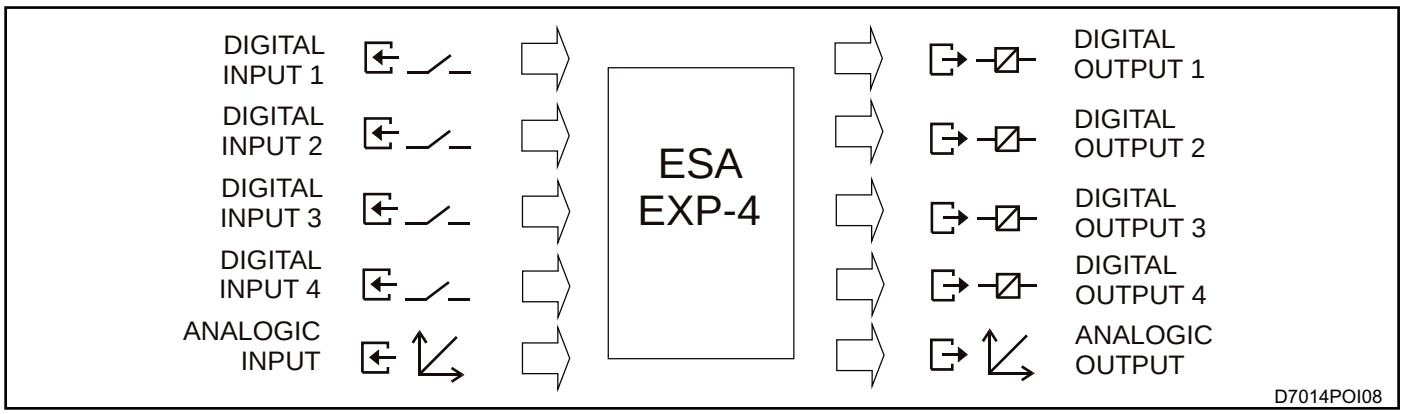

■ **ESA EXP-5**: expansion that has four digital inputs and four digital outputs with predefined functions. For detailed information refer to the specific data sheet E7017.

DISPLAY AND LOCAL BUTTON SECTION

DISPLAY

ESA ESTRO displays different codes to indicate the flame control functioning and lockout statuses.
Fixed symbols indicate normal operating conditions or certain non resettable faults, whilst lock or resettable fault conditions are indicated by flashing symbols.

Normal operation phases

DISPLAY	STATUS	DESCRIPTION
8	**FIXED**	Auto diagnosis phase in which the instrument checks the effciency of its internal components. This phase is carried out each time the device is powered or every time the burner is reignited (duration of about 2s).
S	**FLASHING**	Waiting phase in which the instrument waits for the condition to be unlocked by the operator. It can be unlocked by the local button, remote button or by serial communication. This phase only occurs at power on when the “Cycle start” parameter is programmed on “Stand-by”.
t	**FIXED**	Stopping phase for adjustment requested by the thermostat. The instrument keeps the burner off and waits for the ignition command, forces the air damper to close and deactivates the other outputs.
A	**FIXED**	Air pressure switch waiting phase after having activated the air valve (or combustion blower), or burner stop waiting for the air pressure switch during normal operation regime. This last behaviour occurs when the “Air pressure switch” parameter is programmed on “Waiting”.
n	**FIXED**	Air damper opening phase waiting for the limit switch of the maximum position reached or for the minimum purge flow switch (FSL) consent, to purge with maximum air flow. This phase occurs with expansion cards when the “Air flow or damper switch control” parameter is programmed on “Local, Remote or FSL enable purge”, or if the function assigned to the digital input is “FSL enable purge”.
P	**FIXED**	Chamber purging or waiting phase before burner ignition. In applications with controlled cooling, this status indicates the phase in which only the air valve is on. During this phase flame absence is checked otherwise lockout is determined due to illegal flame.
u	**FIXED**	Air damper closing phase waiting for the limit switch of the minimum position reached or for the consent from the maximum ignition flow switch (FSH) consent, to carry out ignition at minimum power. This phase only occurs with expansion cards when the “Air flow or damper switch control” parameter is programmed on “Local, Remote or FSH enable ignition”, or if the function assigned to the digital input is “FSH enable ignition”.
1	**FIXED**	1st stage burner ignition phase, lasting the same amount of time as the first safety time. The instrument activates the ignition transformer and 1st gas stage solenoid valve, then at the end, deactivates the transformer and checks the flame formation.
2	**FIXED**	1st stage burner flame stability check phase: at the end of this the instrument checks the efficiency of the flame amplifier. This phase also occurs following a shut down command of the 2nd stage burner.
3	**FIXED**	Regime phase for ESTRO-A, ESTRO-C and ESTRO-Q versions. For ESTRO-B it is the 2nd stage burner ignition phase, lasting the same amount of time as the second safety time. The instrument activates the 2nd gas stage solenoid valve keeping the 1st gas stage on. This is a regime condition for the ESTRO-B when the “1st stage gas outlet type” is programmed on “Intermittent”.

DISPLAY	STATUS	DESCRIPTION
4	FIXED	Regime phase for ESA ESTRO-B with only 2nd stage burner on. The instrument intercepts the 1st stage solenoid valve. This phase occurs only when the “1st stage gas outlet type” parameter is programmed on “Interrupted”.
6	FIXED	Regime phase with air valve on. In case the “Air pressure switch parameter” is programmed on “Lockout o Waiting" the instrument waits for the pressure switch signal before indicating this phase, whilst if “Disable” is programmed the transition to this phase corresponds with the activation of the air valve . This phase occurs only when the “Air flow control mode” parameter is programmed on “Discontinue or Pulse”.
4	FIXED	Detection system check phase in which the instrument verifies that the flame is extinguished in a maximum time of 20 seconds after burner shut down, otherwise there is lockout for illegal flame.
8.	FIXED DOT	Chamber purging or waiting phase following burner shut down. During this phase the instrument does not accept any command and displays the phase or lockout code that caused shut down, besides the fixed decimal point.
H	FIXED	Stop phase for regulation requested by serial communication. The instrument keeps the burner off, waits for an ignition command, forces the air shutter to close and deactivates all the other outputs.
8.	FLASHING DOT	High temperature functioning on. During this operation the instrument displays the lockout or phase code, besides the flashing decimal point. If the high temperature function provides only the prepurge exclusion, this indication is present in all the phases prior to the ignition of the burner.

Lockout or failure

DISPLAY	STATUS	DESCRIPTION
0	FLASHING	Manual stop generated by the operator via the local or remote button when the burner is in a normal operation phase. The instrument keeps the burner off and waits for the unlock that can be given by local button, remote button or serial communication.
d	FLASHING	Lockout due to the detection of an illegal flame, during the phases before the burner ignition phase or after the shut down phase. The causes can be found in the detection system (broken probe or presence of humidity in UV-2) or in a gas leakage from the solenoid safety valve that allows the burner to remain on.
U	FLASHING	Lockout due to the missing flame formation during 1st gas stage burner ignition. The causes can be found in the ignition system (no spark from the electrodes or broken transformers), in the bad flow regulation of fuel and combustion agents, or in the detection system (broken probe, interrupted cables, ground not connected). Specifically, in the first two cases the flame does not ignite, whilst in the last case the flame forms but ESA ESTRO is unable to detect it.
F	FLASHING	Lockout due to the flame signal loss during normal burner operation. The causes can be found in the flow regulation of combustion air and fuel (rapid flow variations, regulation out of allowed range). Furthermore, this lockout condition is due to malfunctioning of the sensibility probe dimming shutter when permanent operation is on with UV detection, if this does not open after the hourly check.

DISPLAY	STATUS	DESCRIPTION
C	FLASHING	Lockout due to the extended absence of serial commands by the remote supervisor, for a longer period of time than the period programmed in the “Communication timeout” parameter.
P	FISSA	Malfunctioning is due to the presence of the air pressure switch signal before the instrument has activated the combustion blower. The causes can be found in the incorrect wiring or in a fault in the air pressure switch. During normal operation, this indication appears for a few seconds during the air pressure signal test.
P	FLASHING	Lockout due to the malfunctioning of the internal circuit related to the air pressure switch input. If after an attempt to reset, the problem reoccurs, the instrument must be sent back to the manufacturer.
A	FLASHING	Lockout due to the missing air pressure switch signal during normal burner operation. The causes can be found in the combustion air flow (blocked filters, blower off) or in a pressure switch failure.
n	FLASHING	Lockout due to the presence of the maximum position limit switch signal or minimum purge flow switch (FSL), before the instrument has commanded the air damper to open. Furthermore, this lockout can occur when the prepurge FSL check is on, but when the signal is received the input test result is negative. The causes can be found in the incorrect wiring or regulation of the air shutter limit or flow switch.
u	FLASHING	Lockout due to the presence of the minimum position limit switch signal or maximum ignition flow switch (FSH), before the instrument has commanded the air damper to close. Furthermore, this lockout can occur when only the FSH ignition check is on, but when the signal is received the input test result is negative. The causes can be found in the incorrect wiring or regulation of the air shutter limit or flow switch.
r	FLASHING	Lockout due to the failure of the air damper to close at the end of purging. The instrument waits for the minimum position limit switch signal for a maximum of 150 seconds from the closing command. The causes can be found in the incorrect wiring or regulation of the air damper limit or flow switch.
L	FLASHING	Lockout due to failed power consumption by the electric devices connected to the instrument (ignition transformer or solenoid valves). The causes can be found in the breaking of one of the ignition devices, output protection fuse, in an interrupted electric connection or if the non resettable protection fuse of the internal relays is broken. In the last case the instrument must be sent to the manufacturer.
9	FLASHING	Lockout due to a failure in the flame detection probe. The causes can be found in the breaking of the probe, a short circuit of the probe or in its ground connection (burner body), in the inverted connection of the ESA UV-2 sensibility probe, in the incorrect ground connection of the instrument or in the strong currents on the furnace mass (welding machines operating, etc).
7	FLASHING	Lockout due to malfunctioning of the internal flame amplifier detected after ignition or during the periodic check or the flame amplifier sensor. Furthermore this lockout is due to the malfunctioning of the dimming shutter probe when the permanent operation with UV detection is running. The causes can be found in the incorrect wiring or in the functioning of the UV-2 shutter. Otherwise, if after an attempt to reset the problem reoccurs, the instrument must be sent back to the manufacturer.
6	FLASHING	Lockout due to the malfunctioning of the internal circuit related to the thermostat input. If after an attempt to reset the problem reoccurs, the instrument must be sent back to the manufacturer.

DISPLAY	STATUS	DESCRIPTION
E	FLASHING	Lockout due to an error in the internal memory reading. The failure can be temporary or final. The causes can be found in the incorrect connection to ground of the instrument or of the connected ignition devices, in the missing suppression filter in the ignition electrode connector, or else in the strong electromagnetic disturbances in the atmosphere or in the power supply. If after an attempt to reset the problem reoccurs, the instrument must be sent back to the manufacturer.
t	FLASHING	Lockout due to missing communication with the optional card, if the presence of the expansion card has been configured. The causes can be found in the incorrect programming or in a card failure; in the first case check the programming, whilst in the second case if after an attempt to reset the problem reoccurs, the instrument must be sent back to the manufacturer.
0	FLASHING	Lockout due to a short circuit in the internal command relay. If after an attempt to reset the problem reoccurs, the instrument must be sent back to the manufacturer.
9	FIXED (1)	Malfunctioning due to the front button or the digital input button (if the reset/stop function from remote is on) that are blocked as if pressed during the auto diagnosis of the instrument. The causes can be found in the connection and control of the remote reset, in the possible absence of the RC filter, or front button failure. To reset the alarm, cut off the power to the instrument for a few seconds.
-	FIXED (1)	Malfunctioning due to memory corruption or a failure in the safety system. The failure can be temporary or final. The causes can be found in the incorrect ground connection of the instrument or of the connected devices, in the missing suppression filter in the ignition electrode connector, or else in the strong electromagnetic disturbances in the atmosphere or in the power supply. To reset the alarm, cut off the power to the instrument for a few seconds. If the problem reoccurs, the instrument must be sent back to the manufacturer.
0	FIXED (1)	Malfunctioning due to a short circuit in the internal safety relay. To reset the alarm, cut off the power to the instrument for a few seconds. If the problem reoccurs, the instrument must be sent back to the manufacturer.
8.	FIXED (1)	Malfunctioning due to a short circuit between the pins and the microprocessor. If the problem reoccurs, the instrument must be sent back to the manufacturer.
J	FIXED (1)	Malfunctioning due to a gap in the program. The causes can be found in the incorrect ground connection of the instrument or of the connected ignition devices, in the missing suppression filter in the ignition electrode connector, or else in the strong electromagnetic disturbances in the atmosphere or in the power supply. To reset the alarm, cut off the power to the instrument for a few seconds. If the problem reoccurs, the instrument must be sent back to the manufacture
8	FLASHING DISPLAY AND BARGRAPH	Mlafunctioning due to excessive ambient temperature that does not allow the instrument to work. When this malfunctioning occurs the instrument continues to switch on and off displaying only the beginning of the auto diagnosis phase.

(1) (1) The indication of these failures or lockout conditions starts flashing when power is supplied again, indicating that alarm reset is possible.

Configuration

DISPLAY	STATUS	DESCRIPTION
-	**FIXED**	Programming phase from serial input via the special configuration software. During this phase it is not possible to carry out any other operation.
‖	**FIXED**	Programming phase from infrared input via the special programmer. Fase di programmazione da ingresso infrarosso tramite l'apposito programmatore. During this phase it is not possible to carry out any other operation.

BARGRAPH

ESA ESTRO has a bargraph with five leds indicating the flame value detected in a range of 0µA to 90µA. If the detection current is greater than 90µA the upper led is kept on. The flame detection signals generated by electrodes (ionization) are sensibly lower that compared with the signals generated by the UV probe, however, in both cases the stability of the indication on the bargraph is related to the stability of the signal detected by the burner flame.

LOCAL BUTTON

ESA ESTRO allows the configuration of the local button according to the application needs (see Configuration Parameter paragraph). The button can carry out the lock and manual stop functions as well as only lock or only manual stop or else it can be disabled with the possibility of being activated by serial communication.

The button action differs depending on the function:

- Unlock: the local button must be kept pressed for 1 to 3 seconds and when released ESA ESTRO unlocks the condition. If pressed for less or longer than specified, the command is not accepted.

- Halt in manual stop: as soon as the local button is pressed, ESA ESTRO activates the halt.

FUNCTIONING

ESA ESTRO is a configurable device for burner control that, depending on the set parameters, can assume different behaviour or determine different actions (see Configuration parameters). Below there is a description of the main functions or locks.

BURNER IGNITION CYCLE

The following diagram indicates an ignition cycle when the EXP-2 expansion card has been installed to control a package burner with first gas stage output interrupted.

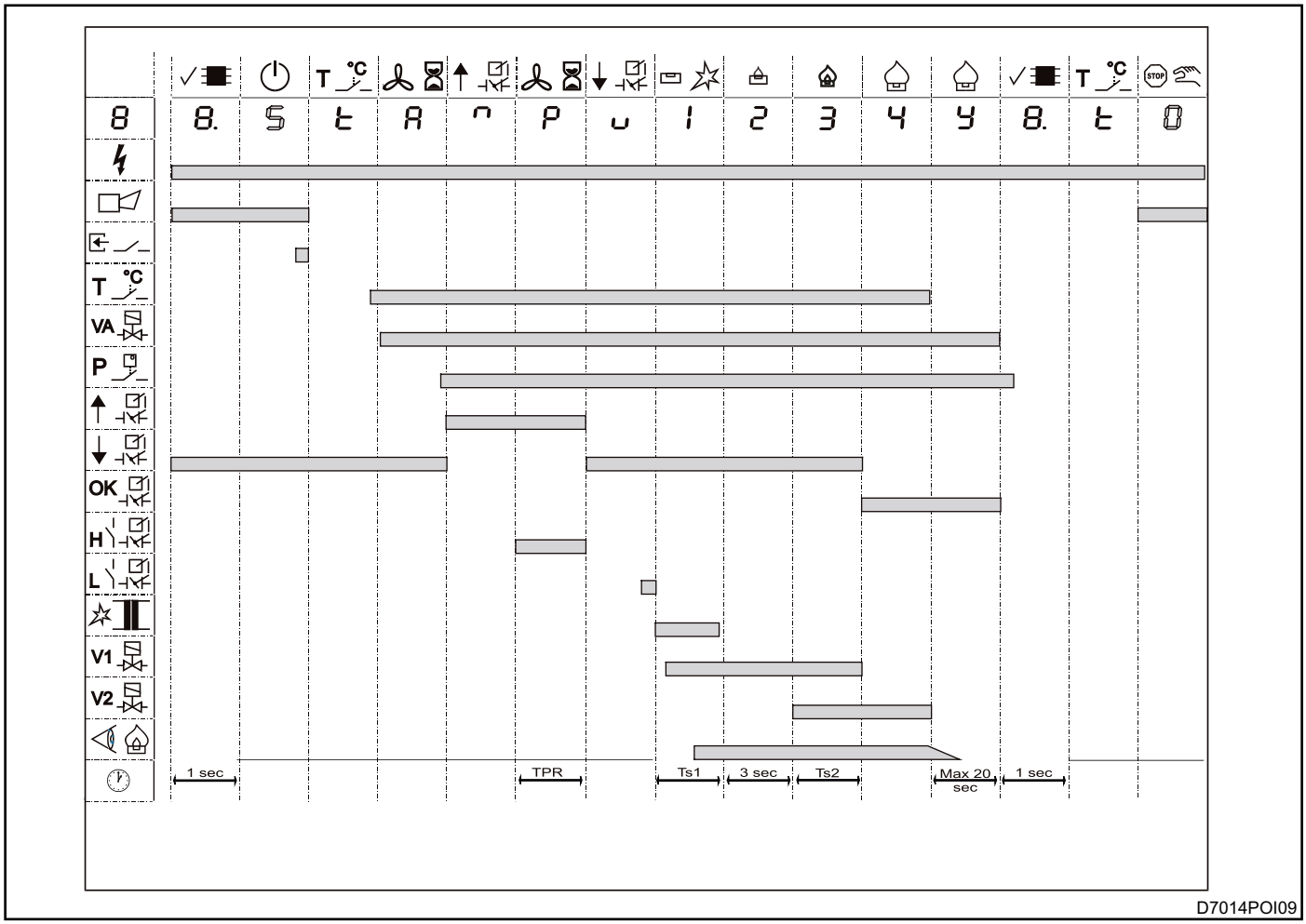

BURNER IGNITION CYCLE

The following diagram indicates an ignition cycle of ESA ESTRO-B version without EXP-2 expansion card with first gas stage output interrupted.

COMPLETE CYCLE

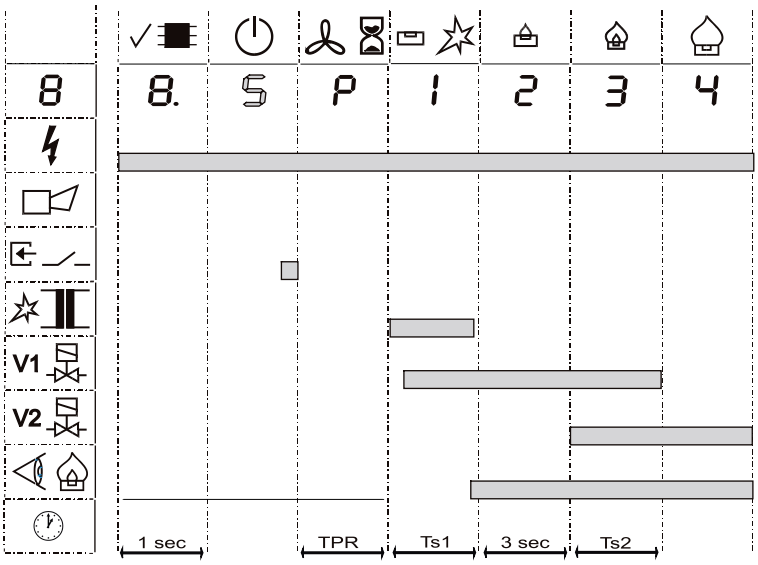

D7014POI10

IGNITION BEHAVIOUR

The following diagrams indicate the behaviour at instrument powering according to the “Cycle start” parameter if configured on “Autostart” or “Standby”.

AUTOSTART

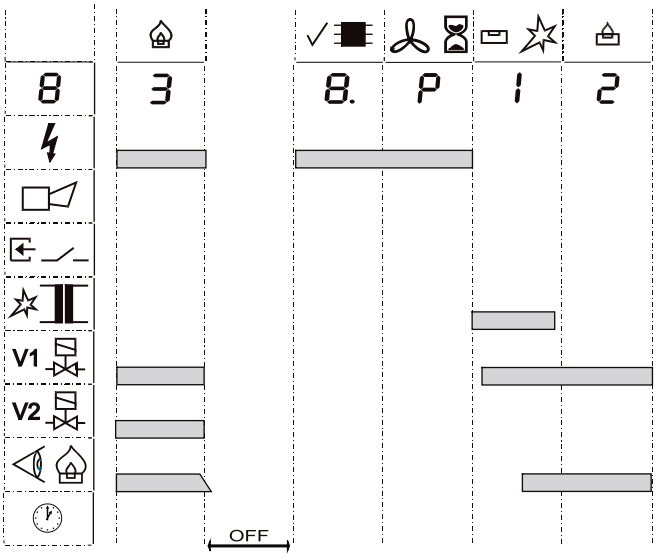

D7014POI11

STANDBY

In the following diagram we have indicated the ESA ESTRO-B ignition cycle without EXP-2 expansion card.

STAND-BY

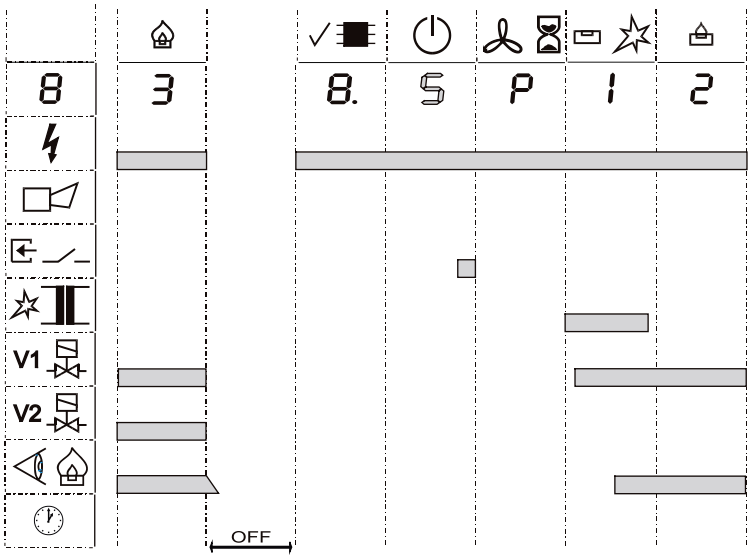

D7014POI12

ILLEGAL FLAME

The following diagram indicates the behaviour in the presence of an illegal flame at burner ignition or shut down

IN FAULT “d”

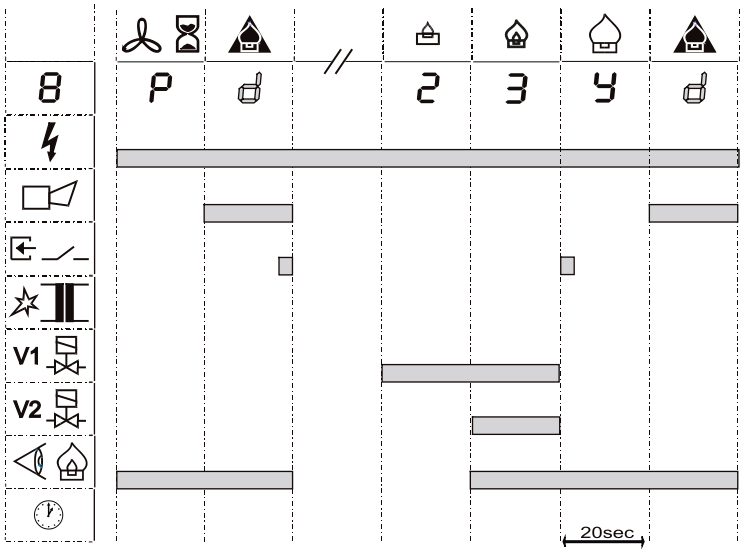

D7014POI13

FAILED IGNITION

The following diagram indicates the behaviour in case of 1st gas stage ignition failure.

IN FAULT "U"

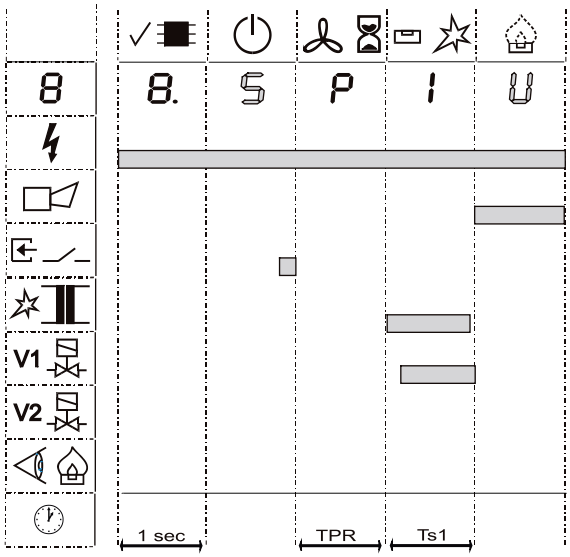

D701414

FLAME SIGNAL LOSS

The following diagram indicates the behaviour if the flame signal is lost with burner in regime phase and with the "Behaviour at flame loss" parameter configured on "Lockout stop".

IN FAULT "F"

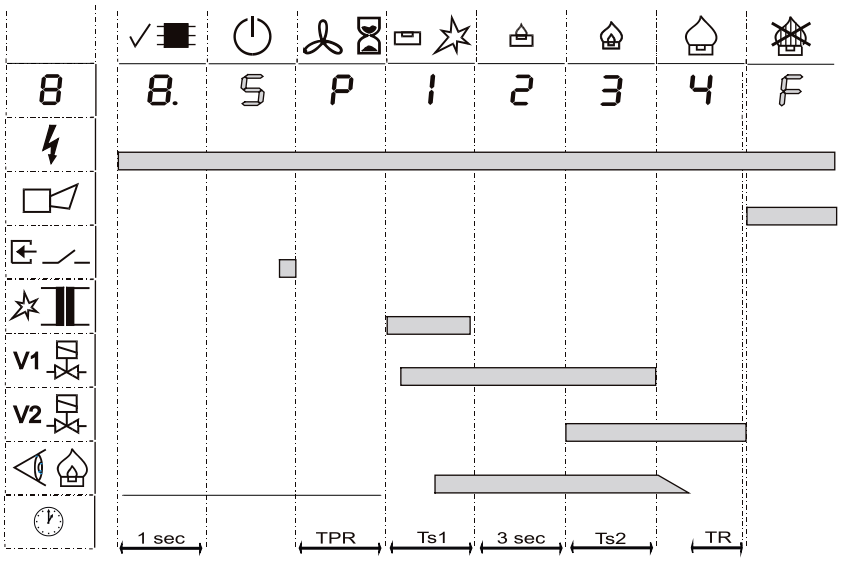

D701415

CONFIGURATION PARAMETERS

The configuration defines the ESA ESTRO functioning mode, adapting it to the needs of the plant. Certain configuration parameters are defined and blocked by the factory in conformity to the related application norms. Others instead, can be altered by the user with the aid of suitable equipment. The modification of the parameters is accepted by the ESA ESTRO when it is in the manual stop condition and can be done with a portable programmer or dedicated software via a serial interface card. The portable programmer communicates via infrared interface and allows the serial communication parameters to be altered.

The software installed on the pc instead, communicates via the ECS serial interface and allows all the non blocked parameters to be altered. With the aid of the software, the user can block other parameters, with the restriction that the blocks can only be removed by the manufacturer or by the person who entered them. Configuration via the ECS serial interface is allowed for one instrument at a time, and it is compulsory to disconnect the network on field and connect it directly to the ECS interface card connected to the PC.

Non blocked parameters

PARAMETER		VALUE	DESCRIPTION
N°	NAME		
/	**Address Segment**	0 ÷ 9 and A ÷ Z capital letters	With “Address Segment” the device is indentified for serial communication. The ECS protocol identifies the zone or the group to which it belongs. With Modbus-RTU protocol the address tens are defined (0÷F for 0÷16 tens).
/	**Address Node**	0 ÷ 9 and A ÷ Z capital letters	With “Address Node” the device is indentified for serial communication. The ECS protocol identifies the unit inside the zone or group. With Modbus-RTU protocol the address units are defined (0÷9 units).
2	**Cycle start**	Automatic ignition Autostart	When powered the instrument automatically starts the ignition cycle, at less than one block before shut down. This configuration is useful when controlling the burner through the power of the instrument.
		Standby	At power on the instrument does not start the ignition cycle but waits for the local or remote ignition command. This configuration is useful when controlling the the burner through serial communication to avoid simultaneous ignitions or for applications that require operator action every time.
3	**Prepurge time**	0 ÷ 99 sec 2 ÷20 min	Chamber purge or waiting time before burner ignition. In applications with air shutter or flow control, the timing starts at maximum opening or with target purge flow (FSL).
5	**Regulation delay time 2°safety time**	0 ÷ 25 sec	Waiting time following the stability check phase of the 1st gas stage, after which air valve regulation is allowed (ESTRO-A and expansions). For the ESA ESTRO-B version this time corresponds to the second safety time (2nd gas stage ignition), for which the parameter is blocked and cannot be changed. Furthermore, when this time has expired, the 1st gas stage shuts down when it is interrupted.
7	**Behaviour at flame failure**	Lockout	The instrument determines shut down in burner lockout, caused by flame signal extinction for longer than the time set in the “Reaction time” parameter (reset is required).
		Recycle	The instrument performs a sequence of complete ignition (including prepurge) after the flame signal has disappeared. When burner ignition has taken place correctly, at the next flame extinction, the instrument performs another ignition sequence.

PARAMETER		VALUE	DESCRIPTION
N°	NAME		
7	**Behaviour at flame failure**	Respark	The instrument performs burner reignition (excluding prepurge) after the flame signal has disappeared. When burner ignition has taken place correctly, at the next flame extinction, the instrument performs another reignition sequence.
		Only one recycle	The instrument performs a sequence of complete ignition (including prepurge) after the flame signal has disappeared. When burner ignition has taken place correctly, at the next flame extinction, the instrument performs burner lockout halt (reset is required).
		Only one respark	The instrument performs burner reignition (excluding prepurge) after the flame signal has disappeared. When burner ignition has taken place correctly, at the next flame extinction, the instrument performs burner lockout halt (reset is required).
9	**Postpurge flex**	Inhibited	The instrument begins timing of the “Post purge time” from burner shut down due to a shut down request or lockout.
		Enable	The instrument begins timing of the “Post purge time” from the burner ignition phase. When this configuration is present, the “Postpurge time” becomes the minimum time between one burner ignition and the next.
10	**Postpurge time**	0 ÷ 99 sec 2 ÷4 min	Chamber purge or waiting time before another ignition after burner shut down. During the postpurge phase the instrument does not accept any other command; whilst in applications with air damper control, during this phase the damper is commanded to open. Enabling the “Postpurge flex” function this time becomes the minimum time between one burner ignition and the next.
12	**Air flow control type**	Continue	The instrument activates the air valve (or blower) from the ignition request and keeps it on until burner shut down due a request or lockout. This selection is necessary when the output has to be on for the entire prepurge cycle and burner operation because it controls the combustion blower or air interception valve. When this configuration is present, the “Air on “ and “Air off” commands have no effect.
		Discontinue delayed 0 sec	The instrument activates the air valve from the ignition request until the end of the purging phase. It deactivates the valve by passing instantaneously to the ignition phase and then activates it from the end of the “Regulation delay time” until the burner shuts off due to a shut down request or lockout. This selection is useful in applications having an air partializing valve that must be activated for controlled prepurge or cooling.When there is this configuration, the “Air on” and “Air off” commands have effect from the end of the “regulation delay time”.
		Pulse	The instrument activates the air valve from the end of the “regulation delay time” until the burner shuts off due to a shut down request or lockout. This selection is useful in applications having an air partializing valve but that don’t need to be activated for controlled prepurge or cooling. When there is this configuration, the “Air on” and “Air off” commands have effect for air valve control purposes.
		Remote	The instrument activates the air valve output only from the ignition phase until the end of the “regulation delay time”. This configuration is used when the EXP-2 expansion card is present and via the negated blower output (NC contact), to interrupt the air valve remote command allowing minimum burner ignition.
		Discontinue delayed 3 sec	The instrument maintains the same behaviour as when “Discontinue delayed 0 sec” is selected, with the difference being that from the valve closing command, it waits for 3 seconds before moving onto burner ignition, giving the valve time to close.

PARAMETER		VALUE	DESCRIPTION
N°	NAME		
12	Air flow control type	Discontinue delayed 5 sec	The instrument maintains the same behaviour as when “Discontinue delayed 0 sec” is selected, with the difference being that from the valve closing command, it waits for 5 seconds before moving onto burner ignition, giving the valve time to close.
		Discontinue delayed 10 sec	The instrument maintains the same behaviour as when “Discontinue delayed 0 sec” is selected, with the difference being that from the valve closing command, it waits for 10 seconds before moving onto burner ignition, giving the valve time to close.
13	Digital input function	Inhibited	The state of the digital input is not checked by the instrument.
		Reset / Stop	The digital input has a dual function: with burner on as soon as it activated it leads to manual stop; whilst with burner in stop or lockout, if activated from 1 to 3 seconds when released, burner lockout is activated. The instrument accepts 5 reset commands from remote in 15 minutes.
		Only stop	The digital input is checked by the instrument only with burner running: as soon as it is activated it leads to burner manual stop.
		Only reset	The digital input is checked by the instrument only with burner in stop or lockout: if activated from 1 to 3 seconds, when released burner lockout is activated. The instrument accepts 5 reset commands from remote in 15 minutes.
		Thermostat	The digital input works as a thermostat alternatively at the expansion input: with input on, the instrument switches the burner on, whilst when the input is not on, it determines shut down. This configuration is possible if the EXP-2 expansion card is not installed.
		High temperature	The digital input is used to activate high temperature functioning. This selection is possible only for certain industrial applications where it is allowed according to the EN746-2 and in the “High temperature function” parameter, the instrument behavior is defined when this configuration is present.
		Main burner on / off	The digital input controls the 2nd gas stage as an alternative to the serial commands: with input on and 1st gas stage burner running, the instrument switches on the 2nd gas stage burner; whilst with input off, it determines second gas stage burner shut down.
		Air valve on / off	The digital input controls the air as an alternative to the serial commands: with input on and 1st gas stage burner running the instrument activates the air; whilst with input deactivated, it determines shut down. This function is valid only when the type of air control is discontinuous or impulsive.
		FSL enable purge	Via the flow switch (FSL) the digital input checks the presence of the minimum air flow needed to time purging, as an alternative to the expansion input. This configuration avoids the EXP-2 expansion card as it is necessary to check just this command. The appropriately programmed digital output, will supply the phase to the flow switch.
		FSH enable ignition	Via the flow switch (FSH) the digital input checks the correct air flow for burner ignition, as an alternative to the expansion input. This configuration avoids the EXP-2 expansion card as it is necessary to check just this command. The appropriately programmed digital output, will supply the phase to the flow switch.
		Air pressure switch	The digital input functions as an air pressure switch as an alternative to the expansion input. This configuration avoids the EXP-2 expansion card as it is necessary to check just this command. The instrument behavior depending on the pressure status, is always defined in the “Air pressure switch” parameter (parameter n° 27). The appropriately programmed digital output, will supply the phase to the pressure switch.

PARAMETER N°	PARAMETER NAME	VALUE	DESCRIPTION
14	Digital output function	Stop / fault	The digital output indicates that the instrument is in lockout status, manual stop or waiting after power on (flashing display). The output is not activated during auto diagnosis.
		Fault	The digital output indicates that the instrument is in lockout status. The output is not activated during auto diagnosis, in manual stop status nor waiting after power on.
		Burner ON	The digital output indicates that the burner is on. The output is activated from the end of the ignition phase and remains on for all the burner functioning phases.
		Regolation consent	The digital output allows burner regulation. It activated at the end of the “Regulation delay time” and remains on for the time that the burner is in regime. The behavior of this output is the same as the ready output of the EXP-2 expansion.
		Command NO shutter	The digital output controls the NO dimming UV-2 shutter, needed for periodic check during permanent functioning. Without any command, the shutter is normally open and the digital output is activated in the test phase to command the closing, determining the dimming of the UV-2 probe.
		Command NC shutter	The digital output controls the NC dimming UV-2 shutter, needed for periodic check during permanent functioning. Without any command, the shutter is normally closed and the digital output is deactivated in the test phase to command the closing, determining the dimming of the UV-2 probe.
		Digital input control	In the absence of the EXP-2 expansion, the digital output controls the phase sent to the air pressure or flow switches when the digital input takes on the “FSL enable purge”, “FSH enable ignition” or “Air pressure switch” functions. This selection is necessary to check the efficiency of the digital input when it carries out these functions.
15	Local botton	Remote enable	The front button is not checked by the instrument as the burner control takes place via serial communication. If the specific status request command is sent, the instrument activates the local button action and it takes on the “Reset / Stop” function to allow local maintenance operations.
		Reset / stop	The front button has dual function: with burner running, as soon as it is pressed, it determines manual stop; whilst with the burner in stop or lockout, if pressed for 1 - 3 seconds, when released, it unlocks the burner.
		Only stop	The front button is checked by the instrument only with burner running: as soon as it is pressed it determines burner manual stop.
		Only reset	The front button is checked by the instrument only with burner in stop or lockout: if it is pressed for 1-3 seconds, when released it unlocks the burner.
20	Communication timeout	0 ÷ 480 sec	Time limit for serial communication absence, that can be set in ten steps from 0 to 480 seconds, after which the instrument activates the Com-timeout alarm, determining burner stop. Set this parameter at 0 to disable the Com-timeout alarm when serial communication is not used.
21 & 22	Communication Baudrate & Communication protocol	4800 ÷ 38400 ECS	Communication speed (4800, 9600, 19200 and 38400 Bit/s) with ECS protocol. The hardware interface is ECS, and it requires a specific converter.
		4800 ÷ 38400 ModbusRTU 1	Communication speed (4800, 9600, 19200 and 38400 Bit/s) with Modbus RTU (1 stop bit) protocol. The hardware interface is ECS, and it requires a specific converter.
		4800 ÷ 38400 ModbusRTU 2	Communication speed (4800, 9600, 19200 and 38400 Bit/s) with Modbus RTU (2 stop bit) protocol. The hardware interface is ECS, and it requires a specific converter.

PARAMETER N°	PARAMETER NAME	VALUE	DESCRIPTION
25	EXP Installed	Inhibited	The instrument does not control the expansion cards. This configuration is needed when the expansion cards are not installed or if the EXP-3 expansion is present.
		Enable	The instrument activates the expansion card control. This configuration is necessary when the EXP-2, EXP-4 and EXP-5 expansion cards are installed.
27	Air pressure switch	Inhibited	The air pressure switch status is not checked.
		Waiting	The missing air pressure switch signal implies: • During the purge phase it determines the timer reset; • With continuous type air control and burner on it determines shut down and waits for the signal to return (automatic reignition). • With discontinuous or impulsive type air control, with burner on, it determines the status change for air deactivation.
		Lockout	The missing air pressure switch signal implies: • During the purge phase it determines the timer reset; • With continuous type air control and burner on it determines shut down in lockout for lack of air (reset is required). • With discontinuous or impulsive type air control, with burner on, it determines the status change for air deactivation.
28	Thermostat input	Inhibited	The thermostat status connected to the expansion card is not checked.
		Enable	The instrument waits for the thermostat signal connected to the expansion card before switching the burner on. if there is no signal the burner is shut down and waits for the signal to return.
29	Air flow or damper switch control	Inhibited	The position of the air damper via the limit switch or the air flow detected via the flow switches, is not checked for prepruge or burner ignition phases.
		Local	The instrument controls the air damper to regulate the air flow for purge and ignintion. To time the purging, the damper is commanded to open and the instrument checks the consent of the maximum position limit switch or the air presence flow switch (FSL) for purging. After this, to activate burner ignition, the damper is commanded to close and the instrument checks the consent of the minimum position limit switch or the maximum flow switch (FSH) for ignition.
		Remote	The air damper position or the air flow is not controlled by the instrument inputs, but by a remote supervisor, which sends specifics serial commands to the instrument to time the purging or to perform burner ignition according to the shutter position or air flow. This function used in the past is not used in recent applications.
		Only FSL	The instrument checks the maximum air damper position limit switch or air presence flow switch for purging (FSL) to time the purging. Once prepurge timing is over, the instrument moves directly onto ignition.
		Only FSH	The instrument checks the consent of the air damper minimum position limit switch or maximum ignition flow switch (FSH) to activate burner ignition.

Locked parameters

PARAMETER N°	PARAMETER NAME	VALUE	DESCRIPTION
4	**1° safety time**	1 ÷ 25 sec	First safety time for ignition of the first gas stage (see table of allowed times).
6	**1° stage gas outlet type**	Intermittent	The 1st gas stage burner is kept running even after the ignition of the 2nd gas stage, until both are shut down at the same time.This configuration is valid for the single stage versions (ESTRO A2, C2 and Q2), or for the ESTRO-B version that controls a double stage burner. When ESTRO-B controls a pilot burner separately from the main burner, check the applicability of the rules based on the application.
		Interrupted	The 1st gas stage burner is switched off after the 2nd gas stage has been stabilized. Shut down takes place after the "Regulation delay /2nd safety time" that in this case corresponds to the 2nd safety time. This configuration is possible only for the ESTRO-B version that controls the pilot burner separately from the main burner.
11	**Burner functioning mode**	Not permanent (stop every 24 hours)	After 24 hours of continuous operation of the burner, the instrument activates shut down to perform efficiency test of the flame detection probes and auto diagnosis. This functioning is useful for not permanent operation burners detected by UV-2. This configuration avoids installing the shutter for the UV-2 probe.
		Permanent with detection rod	Every hour of continuous burner operation, the instrument checks the flame amplifier by disconnecting the flame signal from the detection electrode. This selection is allowed only with ionization flame detection via electrode.
		Permanent with UV and shutter	Every hour of continuous burner operation, the instrument checks the flame amplifier and the UV-2 sensibility probe, by dimming the UV radiation coming into the probe. Dimming occurs via a shutter placed between the probe and the burner. This selection is allowed only with flame UV-2 sensor flame detection.
16	**Automatic ignition trial**	0	The instrument never attempts reignition in lockout conditions.
		1 ÷ 9 generic lockout	Maximum number of automatic recycle attempts (including prepurge), performed by the flame control regardless of the lockout cause. The attempts are done consecutively and only signal the lockout status to remote at the end of all the attempts. When this function is enabled, the instrument conforms only to the EN746-2 Norm.
		1 ÷ 5 recycle for "U" lockout	Maximum number of automatic recycle attempts (including prepurge), performed by the flame control after failed ignition (U lockout). The attempts are done also non consecutively and only signal the lockout status to remote at the end of all the attempts. When this function is enabled, the instrument conforms only to the EN746-2 Norm.
		1 ÷ 5 respark for "U" lockout	Maximum number of automatic reignition attempts (excluding prepurge), performed by the flame control after failed ignition (U lockout). The attempts are done also non consecutively and only signal the lockout status to remote at the end of all the attempts. When this function is enabled, the instrument conforms only to the EN746-2 Norm.

PARAMETER		VALUE	DESCRIPTION
N°	NAME		
17	**High temperature function**	Inhibited	The instrument never activates the high temperature function even after the specific command from the digital input.
		Only flame bypass	The instrument activates the high temperature function with the sole function of flame bypass for the time in which the specific digital input command is present. With this high temperature function on, the instrument keeps the gas valves open regardless of the flame presence signal. When this function is enabled, the instrument conforms only to the EN746-2 Norm, and the command to the digital input must come from the protection system.
		Only prepurge exclusion	The instrument activates the high temperature function with the sole function of prepurge exclusion for the time in which the specific digital input command is present. With this high temperature function on, the instrument does not carry out the prepurge phase but skips directly to burner ignition, monitoring the flame signal.When this function is enabled, the instrument conforms only to the EN746-2 Norm, and the command to the digital input must come from the protection system.
		Flame bypass and prepurge exclusion	The instrument activates the high temperature function with prepurge exclusion and flame bypass function for the time in which the specific digital command is present. With this high temperature function command on, the instrument does not carry out the prepurge phase but skips directly to burner ignition, keeping the gas valves open regardless of the flame signal presence. When this function is enabled, the instrument conforms only to the EN746-2 Norm, and the command to the digital input must come from the protection system.
18	**1°stage gas ignition type**	Fixed	The duration of the first gas safety time for 1st gas stage ignition is fixed. The instrument checks the flame formation only at the end of the 1st safety time after having deactivated the ignition transformer.This configuration is compulsory with systems having unirod or UV2 probe type detection.
		Variable	The duration of the first safety time can be reduced automatically, to immediately reach the regime phase (pulse firing). The instrument continuously checks the flame formation during the ignition phase and as soon as it checks its presence, it deactivates the ignition transformer and passes onto the next phase. This configuration is possible only with systems having detection with a dedicated electrode.
19	**Reaction time**	1 ÷ 20 sec	Maximum safety time allowed between flame signal absence and gas valve interception (see table of allowed times). If the flame signal returns before the time expires, the instrument keeps the current phase, otherwise it determines the behaviour configured in the "Behaviour at flame loss" parameter.

For the ESA ESTRO-B version the "Regulation delay time – 2°safety time" parameter corresponds to the second safety time, therefore the parameter is blocked and cannot be altered (see description of parameter 5).

In the following table the maximum allowed time limits have been indicated. Refer to the specific application norm to establish the correct applicable parameter at installation, choosing according to the burner type and power, values that do not compromise its safety.

If values not allowed by the EN298 but only by the EN746-2 are set, only the reference norm for which ESTRO is applicable is indicated on the label of the instrument.

APPLICATION	NORM	IGNITION SAFTEY TIMES	REACTION TIME	NOTES
Gas burners	EN298	Refer to the application norm	Maximum 1 s	Recycle and reignition allowed.
	EN676	Depend on burner type and power maximum 5 s	Maximum 1 s	Depending on the application, only one recycle attempt is allowed. “Prepurge” mode is specified by the norm.
	EN746-2	Depend on burner type and power maximum 10 s	Depends on the application maximum 2 s	Depending on the application, one recycle attempt is allowed at flame signal loss, two recycle attempts at failed ignition and high temperature functioning. “Prepurge” mode is specified by the norm.
Oil burners	EN230	Depend on burner type and power maximum 20 s	Maximum 1 s	Depending on the application, recycle and allowed reignition.“Prepurge” mode is specified by the norm.
	EN746-2	Depend on burner type and power maximum 10 s	Depends on the application maximum 2 s	Depending on the application, one recycle attempt is allowed at flame signal loss, two recycle attempts at failed ignition and high temperature functioning. “Prepurge” mode is specified by the norm.

INSTALLATION

For correct installation respect the following instructions:

1 - Avoid placing ESA ESTRO near intense magnetic or electric fields and in conditions of direct exposure to heat or combustion products, liquids, solvents or corrosive gases.

2 - Do not limit in any way the area surrounding the instrument, but guarantee adequate space and ventilation to avoid overheating the device.

3 - Installation must be done by qualified staff respecting the regulations in force at the time and place of installation.

4 - All processing of the container necessary for installation of the instrument requires a protection degree equal to or not lower than IP40. For systems used in open air, the protection degree must be equal to IP54. The protection degree can also be guaranteed by the application in which the instrument is put.

5 - If the system has a phase-phase type power, install an insulation transformer, connecting it to one end of the secondary winding referred to ground.

6 - During wiring refer to the technical documentation, respecting polarity between phase and neutral. The terminals for the electrical connections are screw-on type and can accept wires with sections from 0.5 to 2.5mm² and the choice of conductors and their location must be suitable for the application.

7 - Adequately tighten the wires into the terminals to prevent malfunction or overheating which can lead to dangerous conditions. Numbering and the use of appropriate terminals on the conductors is recommended.

8 - The connection from the ignition transformer to the corresponding electrode of the burner, must be performed with cable HV (High Voltage) unshielded, specific for high voltage. Use the connector with integral suppression device for connecting the ignition electrode. The length of the HV cable must not exceed the size indicated, otherwise the ignition transformer must be placed in the vicinity of the burner. The HV cable must be installed far from power cables and metal conduits: ideally it should be left in the open air. For further information on the connection of the ignition transformer, refer to ESA E5004 and E5005 data sheets.

9 - The laying out of the flame signal cables must be separated from power cables and other cables. The use of multi-core cables is not allowed, nor the use of shielded cables. The type of cables must ensure the minimum insulation required between the conductors.

10 - Detection probes and any connectors must be isolated and made inaccessible using proper protection, so as to allow access only to qualified personnel.; if it is considered necessary, place warnings near the probes.

11 - Always make sure the protective earth is connected to the correct terminals and to all metallic frameworks of related elements as well as to the burner with suitable conductors The non-connection of the protective earth to the device, determines irreparable damage as well as a dangerous condition for the application. If necessary use the shoulder screw provided in the base of the instrument, for the interconnection of the grounding conductors.

12 - When using the digital input it is necessary to connect RC filter that is supplied to the terminal as well.

13 - In applications with multiple burners, parallel connections between the outputs of the instruments are not allowed. If the system is controlled via ECS serial interface, follow the specific wiring instructions.

14 - The laying out of the ECS communication line must be separated from power lines, motor control (inverter) and network voltage; above all neither MULTIPOLAR nor SHIELDED cables are to be used.

15 - For the ECS communication lines, use the specific ECS CABLE; alternatively we recommend the use of busway systems taking into account a maximum length of the connecting cable between the busway and instrument of 1 m, both for communication and for the power supply.

16 - The conductors on the inputs of the expansion cards must be wrapped at least once around the ferrites supplied.

17 - In applications with proportional regulation valves (e.g. 4-20mA) controlled by the PLC, to carry out the pre-purge cycle it is possible to directly interface the PLC input to expansion card outputs, which then command the valve according to the device requests. The air valve position or air flow check, must be done directly by the device.

WARNINGS

For correct use of the flame control, respect the following instructions.

■ In the selection of configuration parameters analyze, in addition to the specific rule, any risks associated with certain modes of operation, choosing values which do not jeopardize the safety of the application. Before installing the unit, check that the configuration parameters conform to what has been defined.

■ ESA ESTRO is meant to be electrically connected in a permanent and fixed manner. The reverse / neutral connection may compromise the security of the system. Do not use different phase between the various voltage inputs and do not apply voltages on the output terminals or serial communication.

■ Check the correct connection after installation. Before powering the instrument make sure that the voltage and frequency are correct; ensure that users do not have an absorption greater than the maximum capacity of the output contacts.

■ Burner safety shut down, for unsafe application conditions (emergency, overheating, incorrect pressure values etc), is guaranteed only by cutting off the power to the device. The thermostat inputs (digital or expansion inputs) are not safety inputs, but only for commanding burner ignition and shut down for temperature regulation. The same recommendation is valid for instruments that are controlled by serial communication, where the ignition and shut down commands cannot be considered for safety but only for regulation control.

■ The input digital signal must be pulse-type and must not be present during the instrument's auto diagnosis when the input has the function for Reset/Stop,Only Reset and Only stop; whilst it must be stable when the input has other functions. The reset command is not accepted if the pulse duration is less than or greater than what has been specified.

■ The input digital signal must be pulse-type and must not be present during the instrument's auto diagnosis when the input has the function for Reset/Stop, Only Reset and Only stop; whilst it must be stable when the input has other functions. The reset command is not accepted if the pulse duration is less than or greater than what has been specified.

■ The command that activates the high temperature function, connected to the digital input with special conductors, must derive directly from the safety temperature detector (a part of the protection system according to the EN746-2). The temperature detector guarantees indirect flame control, monitoring that the minimum combustion chamber temperature is enough to guarantee ignition of the fuel introduced. Refer to the specific application norm for the choice of these devices.

■ The power supply for the solenoid fuel valves must be derived only from the outputs on the ESA ESTRO. Control of the fuel solenoid valves by other devices is not allowed (relay, not safety PLC…) that receive the command from the instrument.

■ If the digital input assumes the function of FSL for purging, or FSH for ignition or air pressure, the power supply phase of the sensor must come from the digital output that will be configured for this function.

■ When replacing the output protection fuse, the fuse must be fast acting and with a value that does not exceed the maximum permissible current. Otherwise the not replaceable fuse blows to protect internal relays, so that the device does not work anymore.

■ If there are disturbances with other equipment during the burner ignition phase, use a connector with suppressor filter for the connection of the HV cable to the ignition electrode. Also check that the cable layout is correct (see "Installation" chapter).

■ For unirod detection systems use only specific ignition transformers, that allow operation for unirod ignition and detection. Make sure that the device is connected correctly to the earth protection before ignition to avoid irreparable damage.

■ In order not to overheat the ignition system control devices (solenoid valves and transformers) keep a minimum time lapse between the burner ignition attempts. The minimum time should be calculated as follows: the sum of the purging time plus first safety time plus 5 more seconds.

■ In case of lockout or failure refer to the "Visualization and display" section to identify the failure according to the code indicated by the instrument. Disconnect the power supply before accomplishing any kind of operation on the device.

■ In case of malfunctioning ESA ESTRO must be sent back to the manufacturer for repair. Any type of repair or alteration done by third parties causes the general guarantee conditions to expire and compromises the device safety.

■ If ESA ESTRO only checks the first FSL signal for purging or the FSH one for burner ignition, the operator must occasionally check if the flow switch is working properly (setting out of range etc), as the device checks the input but cannot verify if the switch functions properly. The frequency of these tests can be reduced in applications where both flow switches are managed, as the flame control verifies that the signals arrive only in the correct phase, otherwise an alarm is indicated alarm.

■ ESA ESTRO is a device that controls burner safety organs and checks its efficiency (a part of the protection system according to the EN746-2). It is not intended for burner regulation for which there are appropriate instruments.

ESA ESTRO-A CONNECTIONS

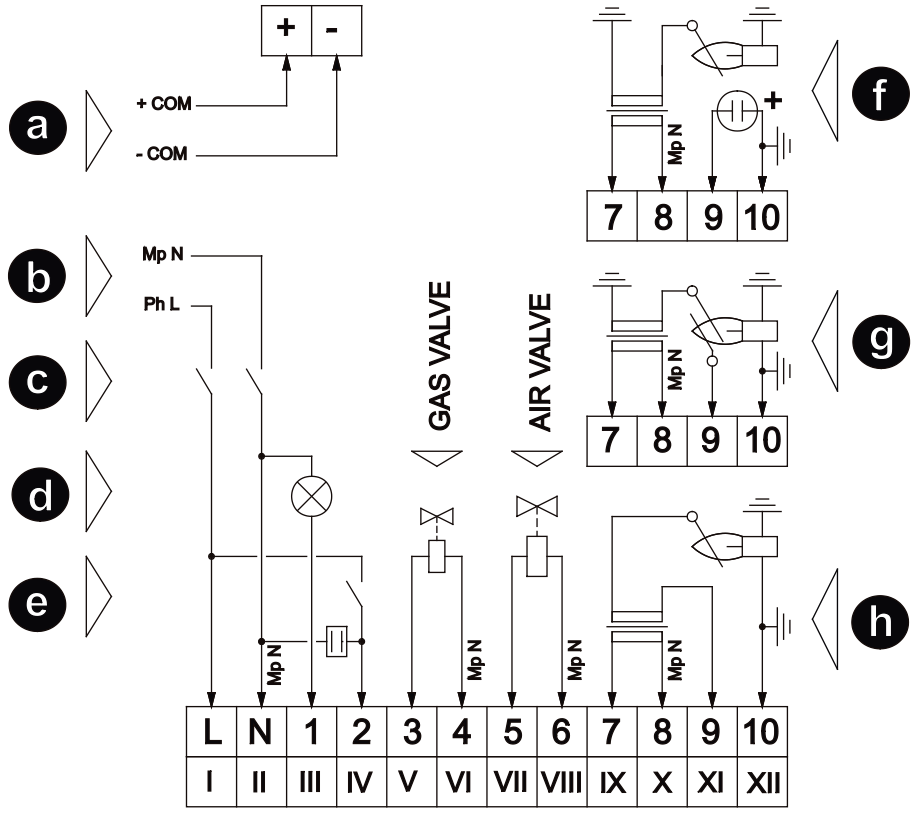

Pos.	Description	Pos.	Description
a	ECS serial communication	**e**	Digital input
b	Power supply	**f**	UV-2 probe flame detection
c	Safety stop	**g**	Flame detection with dedicated electrode
d	Digital output	**h**	Unirod flame detection

Terminal connectors

Pos.	Description	Pos.	Description
L	Power supply phase	**6**	Air solenoid valve neutral
N	Power supply neutral	**7**	Ignition transformer phase
1	Digital output (phase)	**8**	Ignition transformer neutral
2	Digital input (phase)	**9**	Detection electrode, signal from transformer (unirod) or UV probe negative
3	1st gas stage solenoid valve phase	**10**	PE ground protection, burner body and UV probe positive
4	1st gas stage solenoid valve neutral	**+**	ECS communication positive input
5	Air solenoid valve phase	**-**	ECS communication negative input

ESA ESTRO-B CONNECTIONS

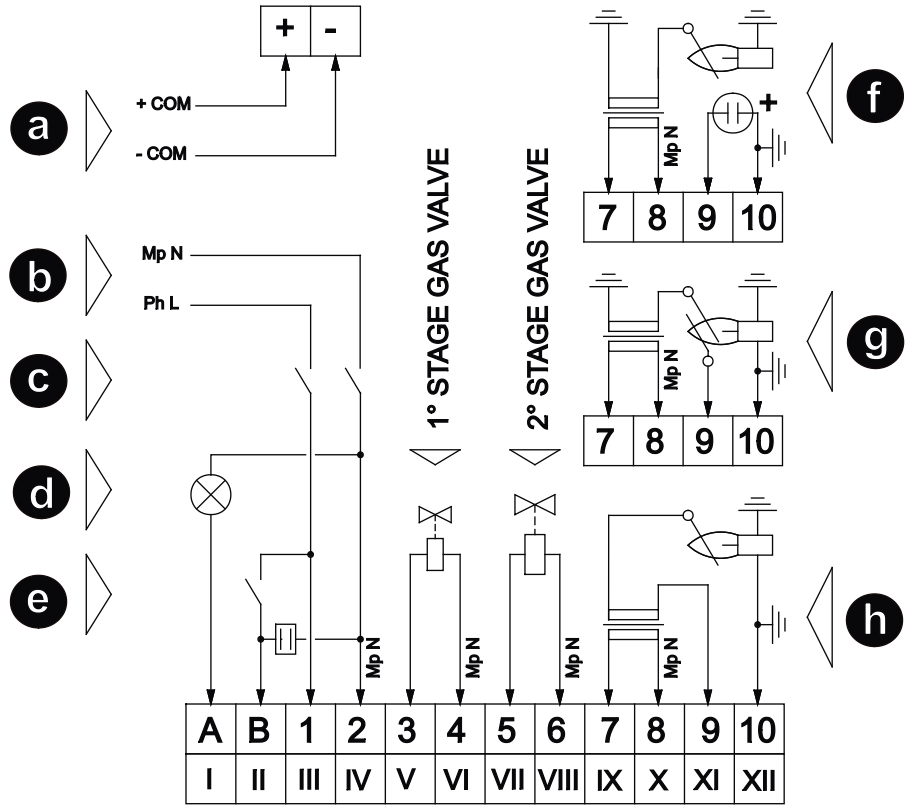

Pos.	Description	Pos.	Description
a	ECS serial communication	**e**	Digital input
b	Power supply	**f**	UV-2 probe flame detection
c	Safety stop	**g**	Flame detection with dedicated electrode
d	Digital output	**h**	Unirod flame detection

Terminal connectors

Pos.	Description	Pos.	Description
A	Digital output (phase)	**6**	2nd gas stage solenoid valve neutral
B	Digital input (phase)	**7**	Ignition transformer phase
1	Power supply phase	**8**	Ignition transformer neutral
2	Power supply neutral	**9**	Detection electrode, signal from transformer (unirod) or UV probe negative
3	1st gas stage solenoid valve phase	**10**	PE ground protection, burner body and UV probe positive
4	1st gas stage solenoid valve neutral	**+**	ECS communication positive input
5	2nd gas stage solenoid valve phase	**-**	ECS communication negative input

ESA ESTRO-C CONNECTIONS

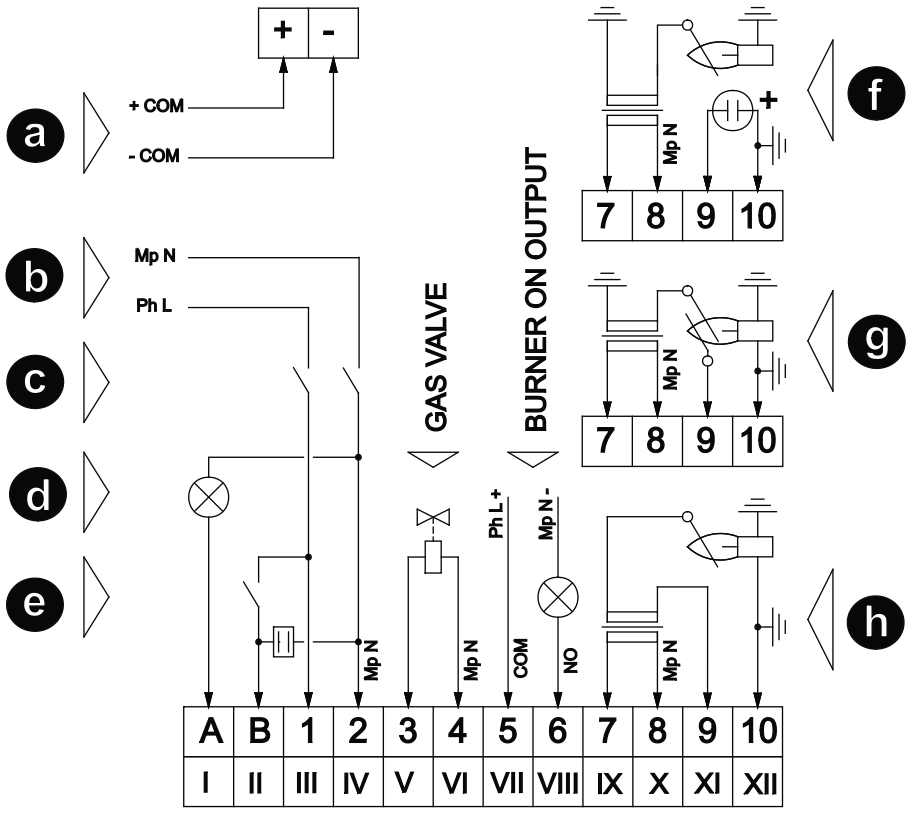

Pos.	Description	Pos.	Description
a	ECS serial communication	**e**	Digital input
b	Power supply	**f**	UV-2 probe flame detection
c	Safety stop	**g**	Flame detection with dedicated electrode
d	Digital output	**h**	Unirod flame detection

Terminal connectors

Pos.	Description	Pos.	Description
A	Digital output (phase)	**6**	Burner on output (NO)
B	Digital input (phase)	**7**	Ignition transformer phase
1	Power supply phase	**8**	Ignition transformer neutral
2	Power supply neutral	**9**	Detection electrode, signal from transformer (unirod) or UV probe negative
3	1st gas stage solenoid valve phase	**10**	PE ground protection, burner body and UV probe positive
4	1st gas stage solenoid valve neutral	**+**	ECS communication positive input
5	Burner on output (COM)	**-**	ECS communication negative input

ESA ESTRO-Q CONNECTIONS

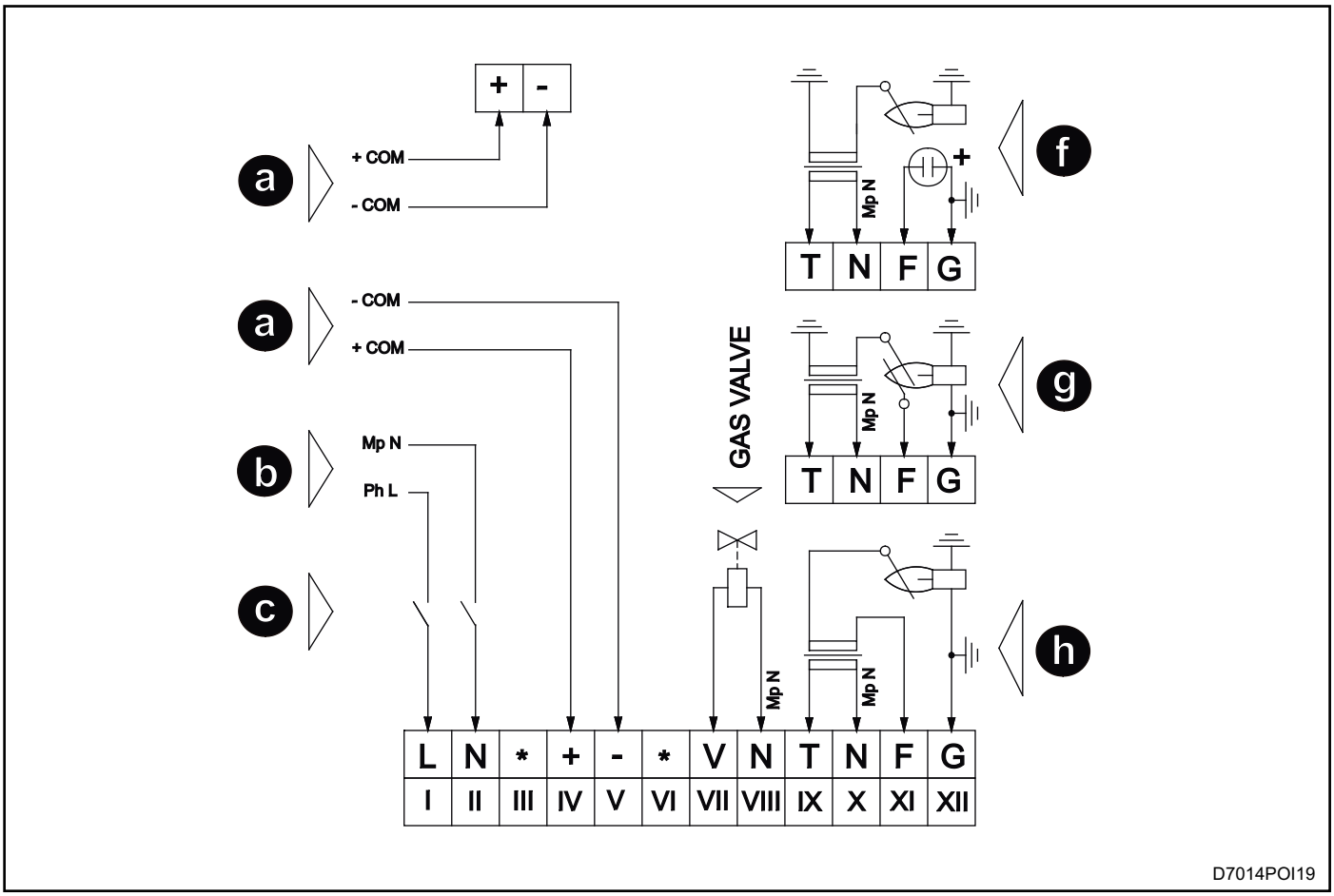

Pos.	Description	Pos.	Description
a	ECS serial communication	**f**	UV-2 probe flame detection
b	Power supply	**g**	Flame detection with dedicated electrode
c	Safety stop	**h**	Unirod flame detection

Terminal connectors

Pos.	Description	Pos.	Description
L	Power supply phase	**N**	1st gas stage solenoid valve neutral
N	Power supply neutral	**T**	Ignition transformer phase
*****	Not connected	**N**	Ignition transformer neutral
+	ECS communication positive input	**F**	Detection electrode, signal from transformer (unirod) or UV probe negative
-	ECS communication negative input	**G**	PE ground protection, burner body and UV probe positive
*****	Not connected	**+**	ECS communication positive input
V	1st gas stage solenoid valve phase	**-**	ECS communication negative input

ESA EXP-2 EXPANSION CONNECTIONS

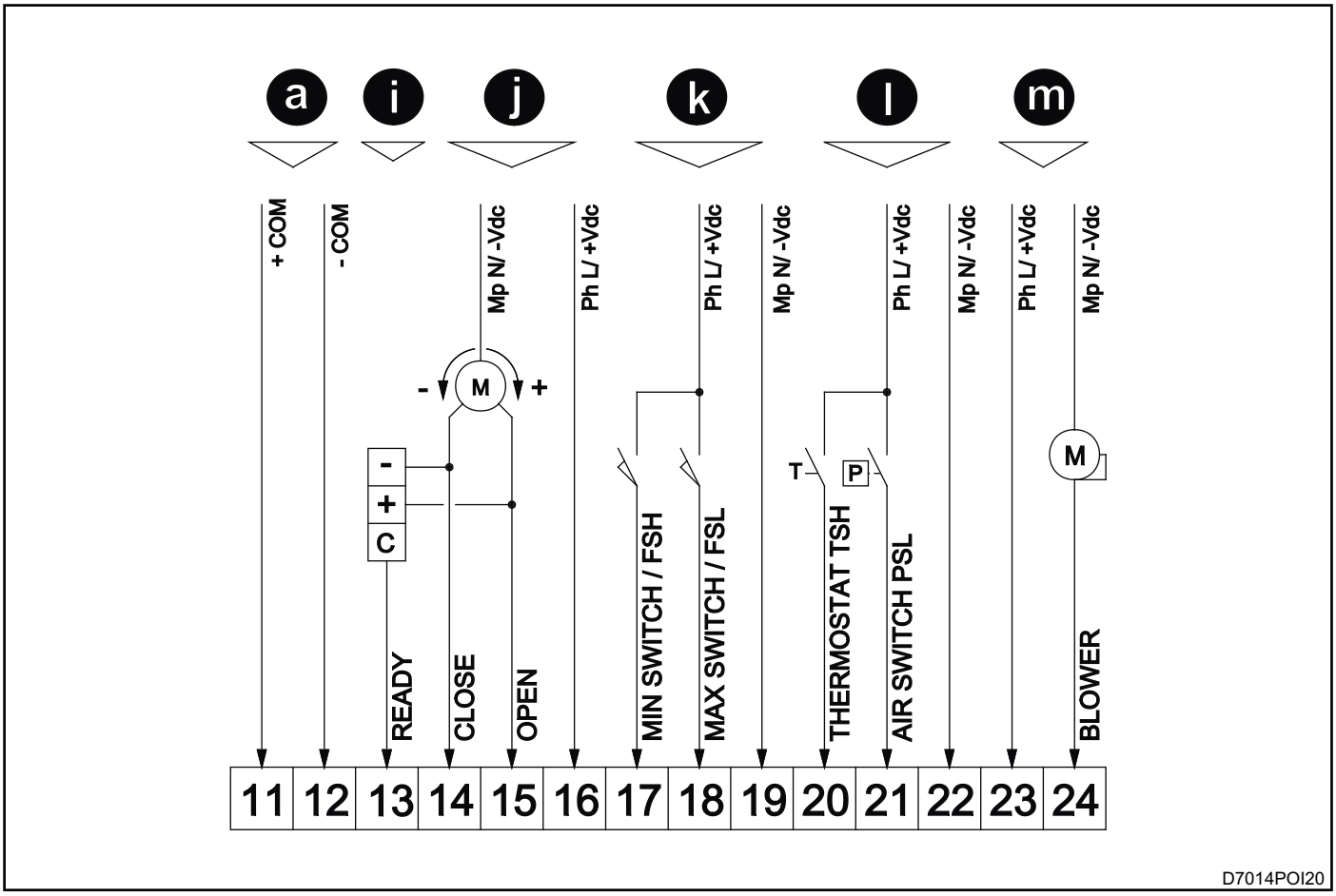

Pos.	Description	Pos.	Description
a	ECS serial communication	**k**	Air regulation valve limit switch or air flow switch
i	External temperature regulator	**l**	Air pressure switch and thermostat input
j	Air regulation valve	**m**	Combustion blower or air valve

Terminal connectors

Pos.	Description	Pos.	Description
11	ECS communication positive input	**18**	Input for FSL purging or maximum position limit switch for air regulation valve (phase)
12	ECS communication negative input	**19**	Input for air flow switch or air regulation valve limit switch neutral
13	Temperature regulation consent output (phase)	**20**	Thermostat input for ignition (phase)
14	Air regulation valve closing output (phase)	**21**	PLS air pressure switch input (phase)
15	Air regulation valve opening output (phase)	**22**	Air pressure switch and thermostat input neutral
16	Power supply phase for air regulation valve control	**23**	Power supply phase for air valve or combustion blower command.
17	Input for air FSH for ignition or air regulation valve minimum position limit switch (phase)	**24**	Air partializing / interception valve or blower command output (phase)

OVERALL DIMENSIONS

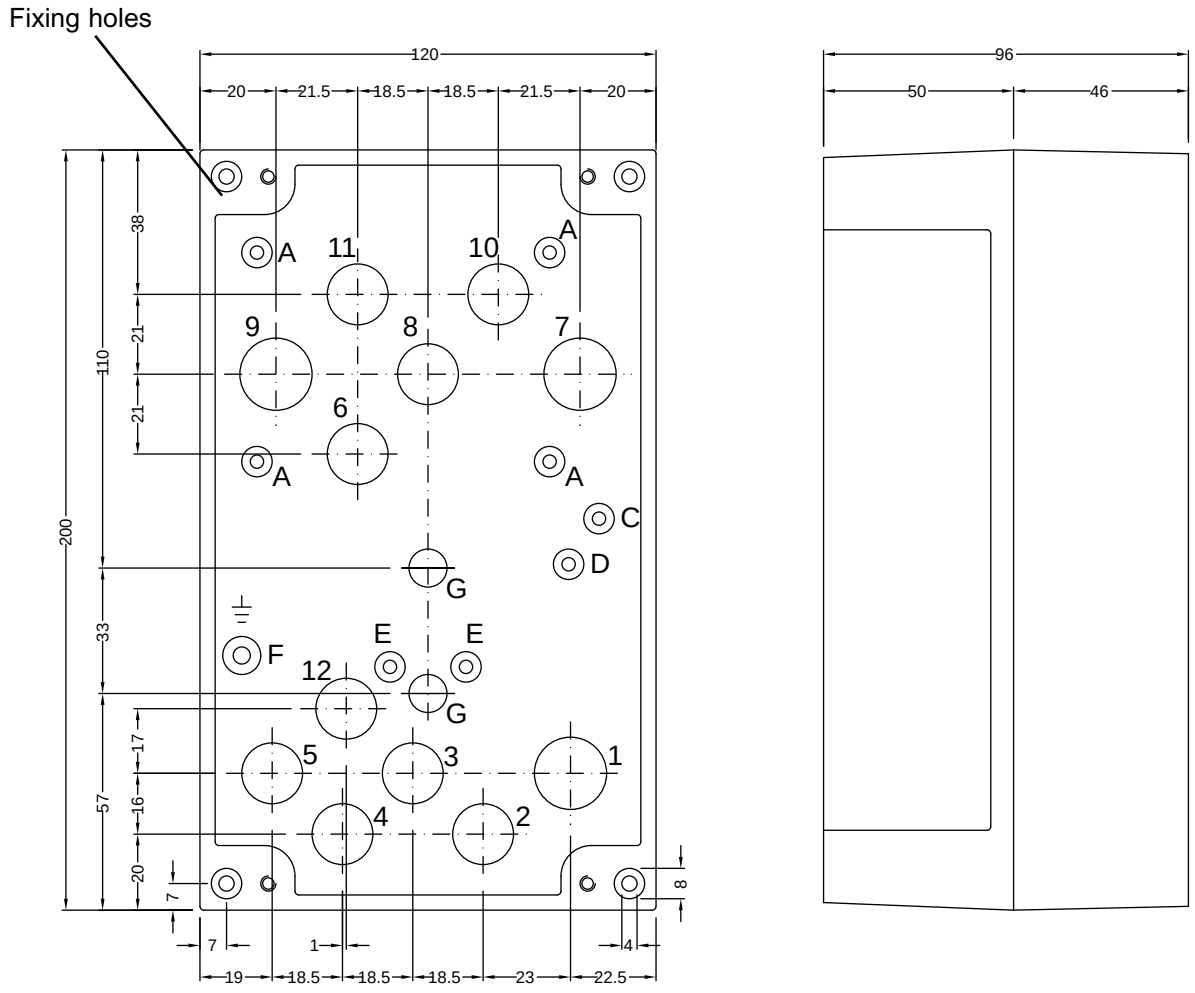

Preformed holes	Diameter mm	Cable
1	19	PG11 - M20x1,5
2-3-4-5-12	16	PG9 - M16x1,5
6-8-10-11 *	16	PG9 - M16x1,5
7-9 *	19	PG11 - M20x1,5

* The mounting of the transformer precludes the possibility of using the steps of cables 6 ÷ 11

Pos.	Elements
A	Fastening connectins for transformer
C	Not used
D	Not used
E - E	Not used
F	Shoulder screw for earthing
G - G	Mounting plate for back collar (tube ½”) – thread M6

The installation of expansion cards, precludes the possibility to mount the transformer inside ESA ESTRO and vice-versa; in this case it necessary to use the ESA TRAFO box to contain the ignition transformer (E5004).

ORDERING CODE

ESA ESTRO 01 02 03 04 05 06 07 08 09 10 11 12 13 14 15

16 17 18 19 20 21 22 23 24 25 26 27 28 29

01 MODEL	
ESTRO - A	A2
ESTRO - B	B2
ESTRO - C	C2
ESTRO - Q	Q2

02 CYCLE START	
Automatic ignition (autostart)	A
Wait for manual reset (standby)	S

03 PREPURGE TIME	
from 0 to 99 seconds	(*)
from 2 to 9 minutes	2M-9M
from 10 to 20 minutes	AM-LM

04 1 ST SAFETY TIME	
from 1 to 25 seconds	(*)

05 REGULATION DELAY / 2nd SAFETY TIME	
from 0 to 25 seconds	(*)

06 1ST STAGE GAS OUTLET TYPE	
Intermittent (continuos)	C
Interrupted	D

07 BEHAVIOR AT FLAME FAILURE	
Lock-out stop	N
Re-clycle enable	Y
Spark restoration enable	K
Only one recycle repetition	R
Only one spark restoration	S

08 SUPPLY VOLTAGE	
115 Vac	1
230 Vac	2

09 POSTPURGE FLEX	
Inhibited	/
Enable	F

10 POSTPURGE TIME	
from 0 to 99 seconds	(*)
2 minute	2M
3 minute	3M
4 minute	4M

(*): Enter the value (in seconds)

11 BURNER FUNCTIONING MODE	
Not permanent (stop every 24h)	D
Permanent with detection rod	R
Permanent with UV and shutter	U

12 AIR FLOW CONTROL TYPE	
Continue or not present	C
Discontinue delayed 0 sec.	D
Pulse	P
Remote	R
Discontinue delayed 3 sec.	E
Discontinue delayed 5 sec.	F
Discontinue delayed 10 sec.	G

13 DIGITAL IMPUT FUNCTION	
Inhibited	/
Reset / Stop	B
Only stop	S
Only reset	U
Thermostat	T
High temperature enabling	H
Main ON / Off function	M
Air ON / Off function	A
FSL enable purge	P
FSH enable ignition	G
Air pressure switch (param.27)	F

14 DIGITAL OUTPUT FUNCTION	
Active only with fault	F
Active with fault and stop	B
Active with burner On	M
Active with regulation consent	R
Active to comand a NO shutter	O
Active to comand a NC shutter	C
Digital input control	K

15 LOCAL BUTTON	
Stop / Reset	B
Stop/reset enabled from remote	R
Only stop	S
Only reset	U

ORDERING CODE

16 AUTOMATIC IGNITION TRIAL	
Inhibited	0
from 1 to 9 for generic lockout	1 - 9
from 1 to 5 recycle for U lockout	A - E
1 - 5 re-ignition for U Lockout	F - L

17 HIGH TEMPERATURE FUNCTION	
Inhibited	/
Only flame signal bypass	H
Only prepurge exclusion	P
Flame bypass & prepurge exclusion	B

18 1°ST STAGE GAS IGNITION TYPE	
Fixed safety time	/
Variable safety time	S

19 REACTION TIME AT FLAME LOSS	
from 1 to 9 seconds	1 - 9
from 10 to 20 seconds	A - K

20 COMMUNICATION TIME OUT	
0 seconds (alarm deactivated)	0
8 seconds	1
16 seconds	2
32 seconds	3
64 seconds	4
128 seconds	5
256 seconds	6
320 seconds	7
400 seconds	8
480 seconds	9

21 COMMUNICATION BAUDRATE	
4800	4
9600	9
19200	1
38400	3

22 COMMUNICATION BAUDRATE	
ECS	E
MODBUS 1	1
MODBUS 2	2

23 SPARE	
	/

24 SPARE	
	/

25 SPECIAL VERSION	
Standard	/
Ignition transformer inside	T
Pre wiring	C
TRAFO coupled with	A
With expansion EXP-2	2
With expansion EXP-3	3
With expansion EXP-4	4
With expansion EXP-5	5

26 EXPANSION PARAMETERS	
27 No expansion present	////
28 Air press. switch in digital input	/x//
29 EXP-2	v. tab. A
EXP-3	v. E7015
EXP-4	v. E7016
EXP-5	v. E7017

Tab. A - Expansion parameters EXP-2

26 Inputs voltage		27 Air pressure switch (**)		28 Thermostat input		29 Air flow or damper switch control	
115 Vac	1	Inhibited	/	Inhibited	/	Inhibited	/
230 Vac	2	Puts in waiting phase	H	Enable	T	Remote serial control	R
24 Vac \ Vdc	4	Stop in lock-out status	L			Locale for prepurge and ignition	L
						Only FSL check for purge	P
						Only FSH check for ignition	G

(**) Parameter 27 defines the operation of the air pressure switch connected to the digital input of the expansion or ESTRO (parameter 13)

(Parameter 25): Certain selections are incompatible with each other (see “Overall dimensions”), if there are several possible selections (T and C, 2 and C or A, etc) the code priority to be indicated is the following: expansion cards, wiring, ignition transformer and finally coupled ESA TRAFO.